# ILAS

**I**ntelligence, **L**ow
**A**coustic **S**ignature
UAV

## Critical Design Review

**February 2009**

# ILAS

Project Supervisor

**Mr. Dror Artzi**

Team Members

Alon Tsin
Guy Lehavi
Nathanel Vidmayer
Genadi Yahnis
Immanuel Benita
Adva Izhak

22.02.09

# Contents

# Introduction

ILAS is a UAV designed for low altitude reconnaissance missions

The Project Requirements are:

- Easy Launch and Recovery.
- Low Acoustic Signature at 1000 ft Altitude .
- Endurance – 5 hours.
- Payload – 2.5 kg EO Sensor.
- Basic Considerations for Low RCS Configuration

# Preliminary Design Recap

## Configuration

The configuration selected was a **Straight Flying Wing with a Vertical Stabilizer.**

## Weight Estimation

The UAV estimated weight at the PDR was **23 Kg.**

## Engine

The engine selected was a **AXI 5330/F3A** electric eng

## Propulsion

The propulsion method selected at the PDR stage we
option to use **Fuel Cell Technology** .

## Payload

The selected EO Sensor is the **T-Stamp (by Contro**

| | Mass (kg) | Distance from (mm) |
|---|---|---|
| Struc | | |
| En | | |
| Avio | | |
| Ba | | |
| Parac | | |
| Payload Sen | | |
| Ai | | |
| | | |

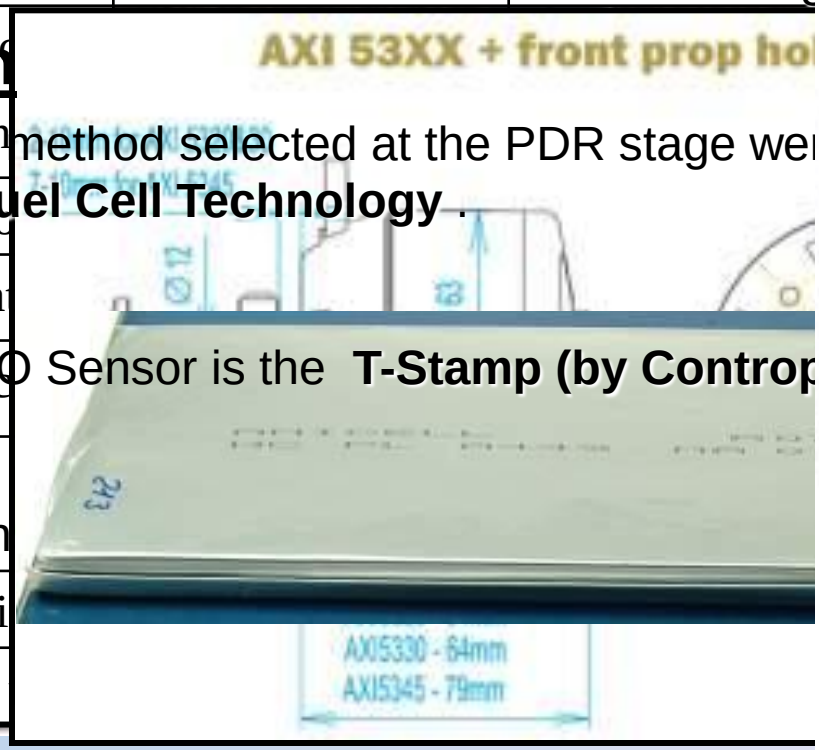


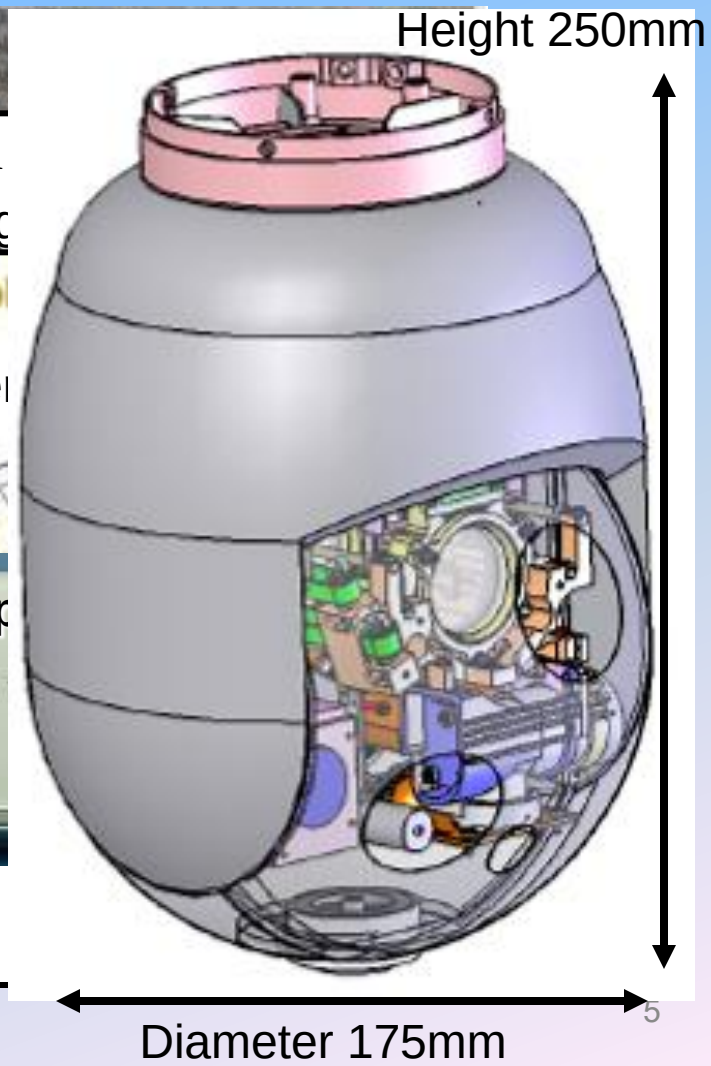

# Preliminary Design Recap

## Launch

The UAV will be launched via **Catapult (Bungee).**

## Recovery

The UAV will be recovered using a **Parachute + Air Bags.**


# Noise Reduction Recommendations

1. **Engine** – An electrical engine is preferable.
2. **Propeller-**

- Reduced/Minimal RPM
- Reduced blade tip speed.
- Increase Number of Blades (Preferably 3 or 4 blades).
- Use tractor propeller configuration (clean flow reduces noise).
- Swept back propeller blades

# Preliminary Design Recap

## Initial Sizing and Calculations

$$S_w = 1.2[m^2]$$

$$AR_{wing} = \frac{b^2}{S_w} = 9$$

$$V_{cruise} = 44.5[kts]$$

$$\frac{L}{D} = 14.5$$

$$V_{stall} = 34.5[kts]$$

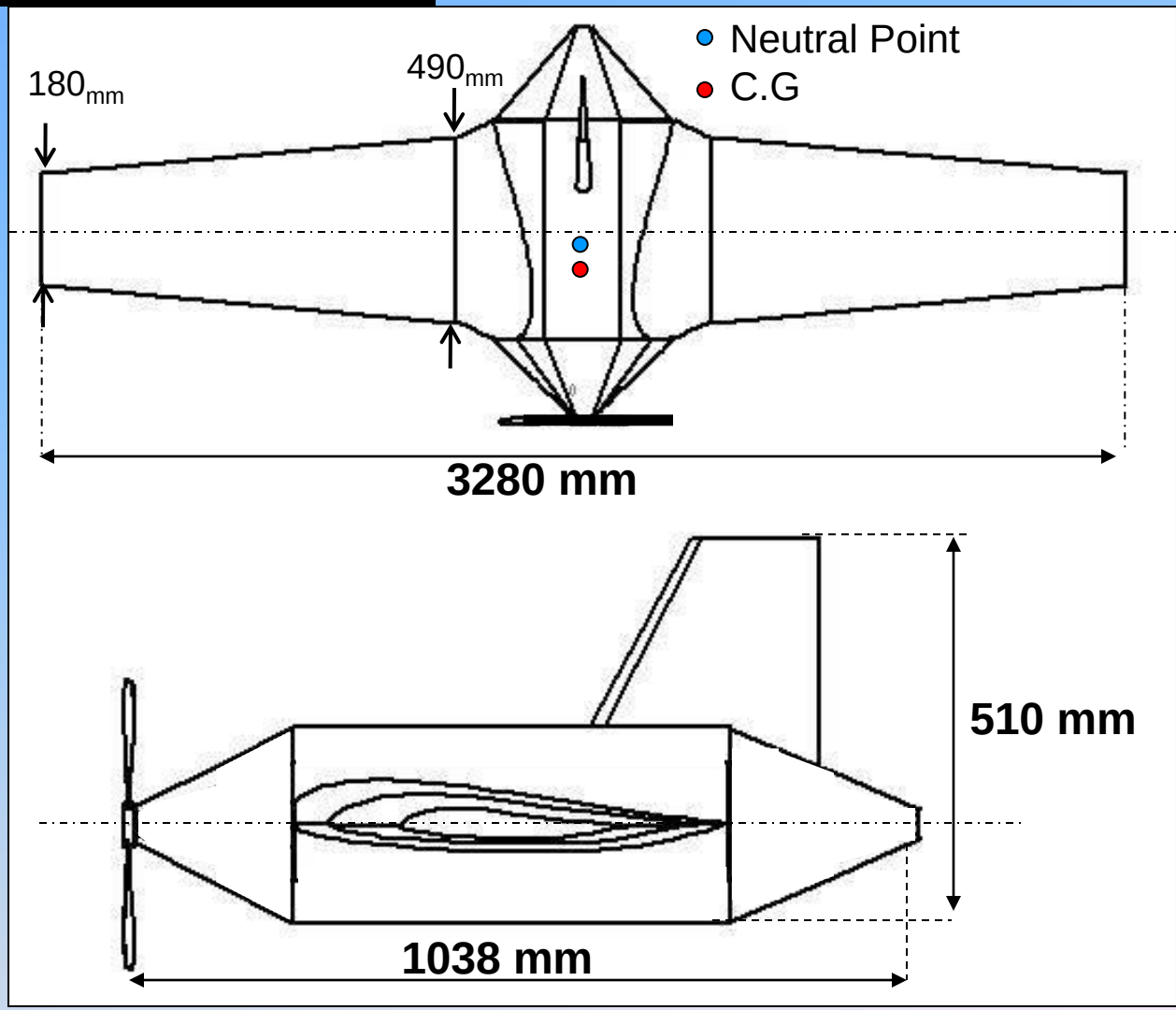

# Preliminary Design Recap

## Initial System Layout

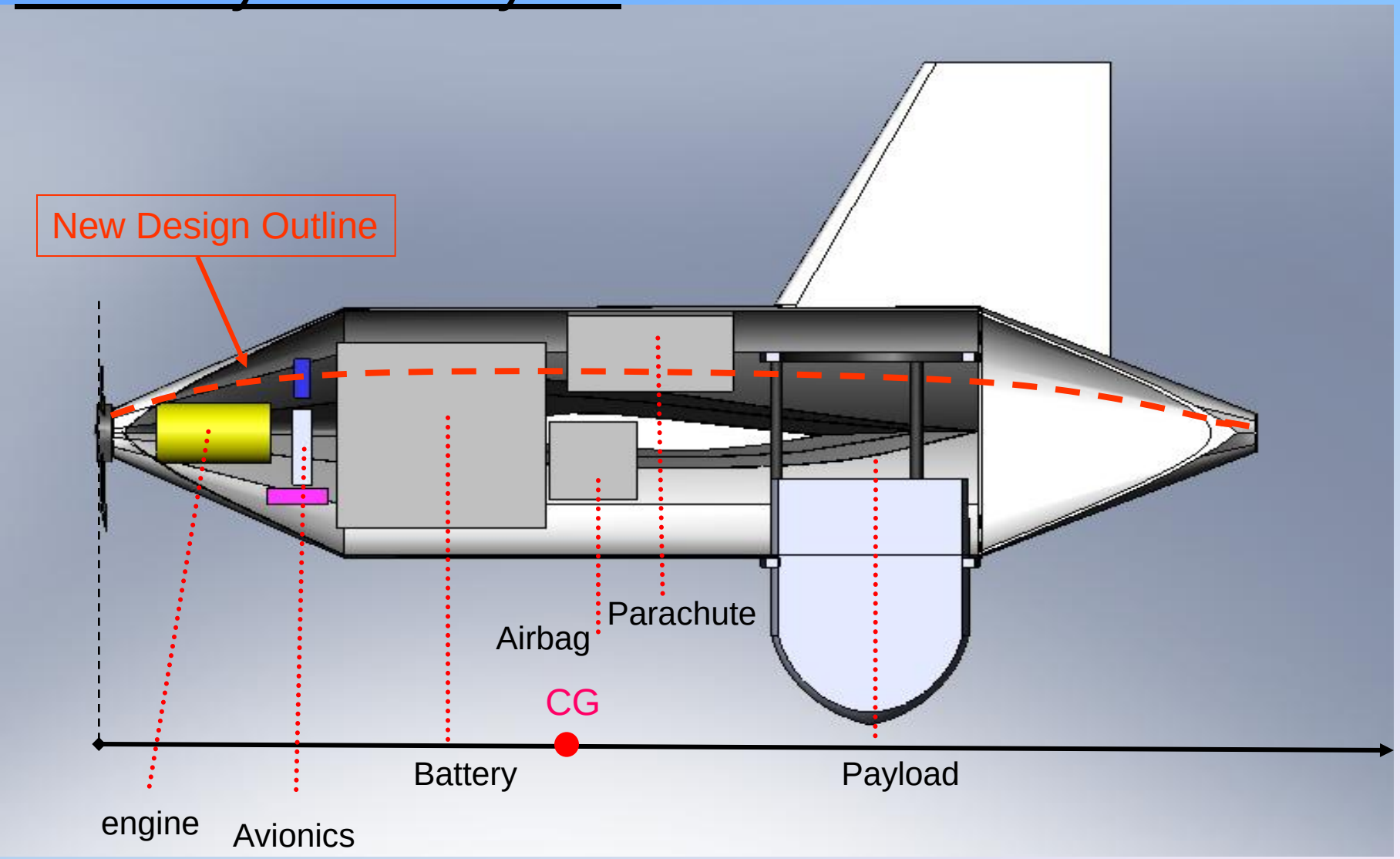

# Preliminary Design Recap

## Initial Geometric Configuration

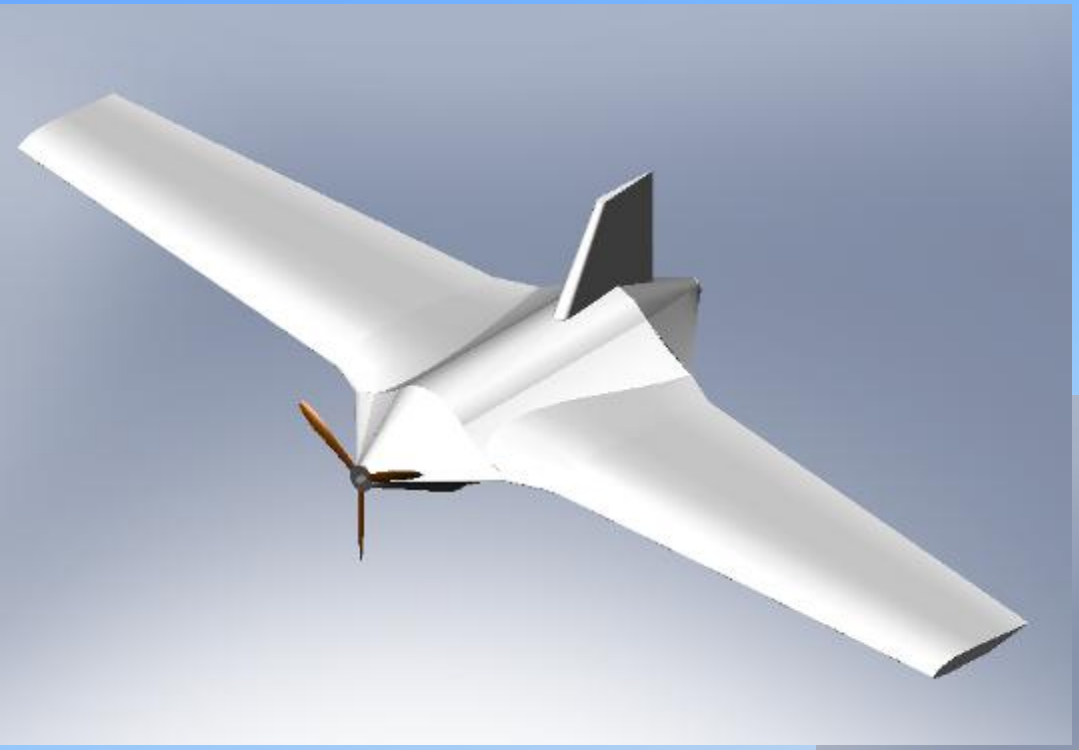

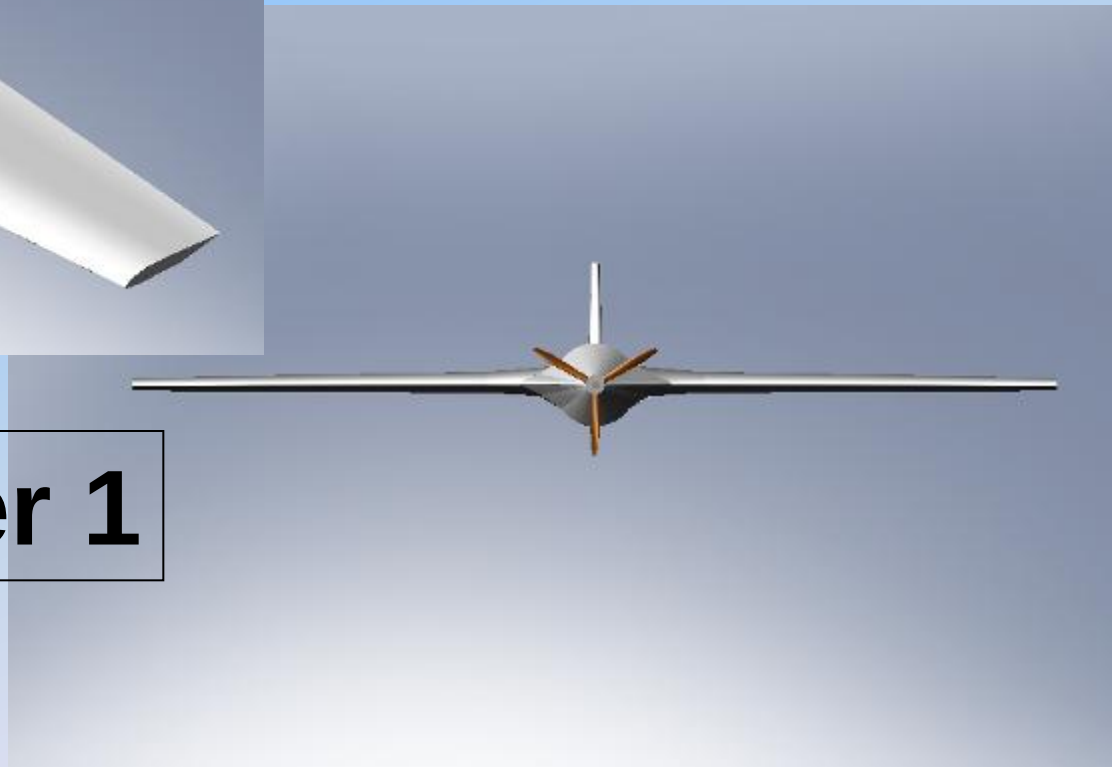

**End of Semester 1**

# Improved Geometrical Layout

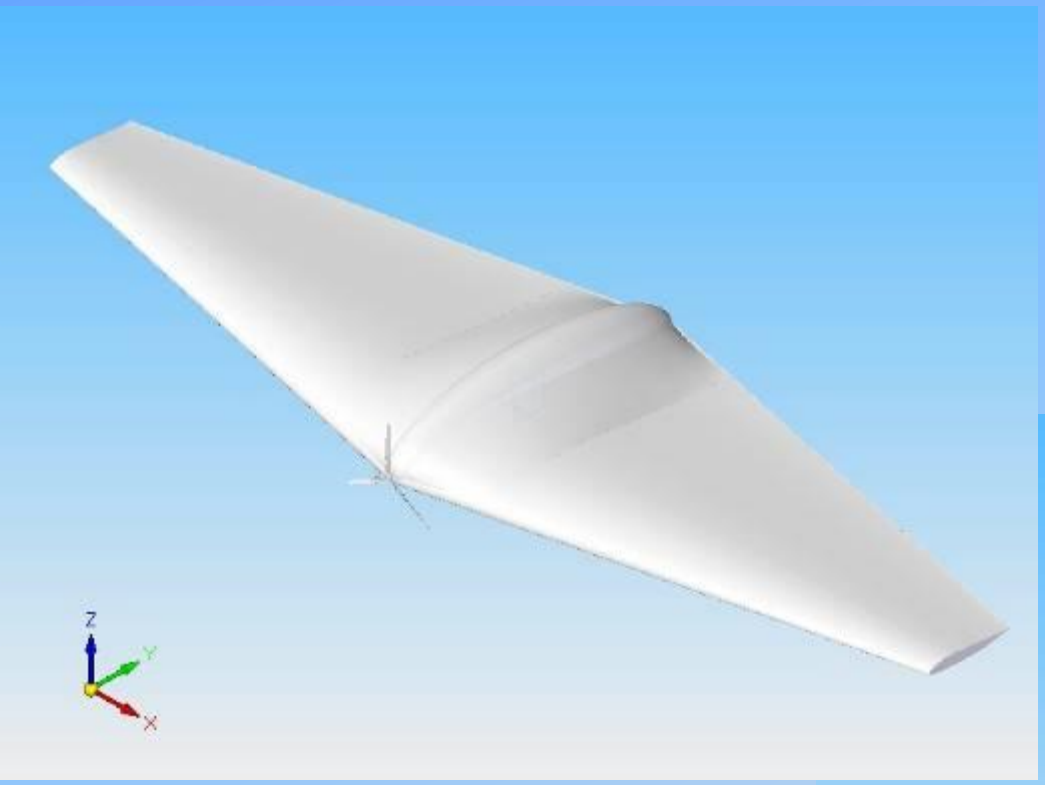


**Geometrical Modifications:**

-Improved Blended Wing Body.

-Decreasing Fuselage height.

-Removing  the vertical stabilizer

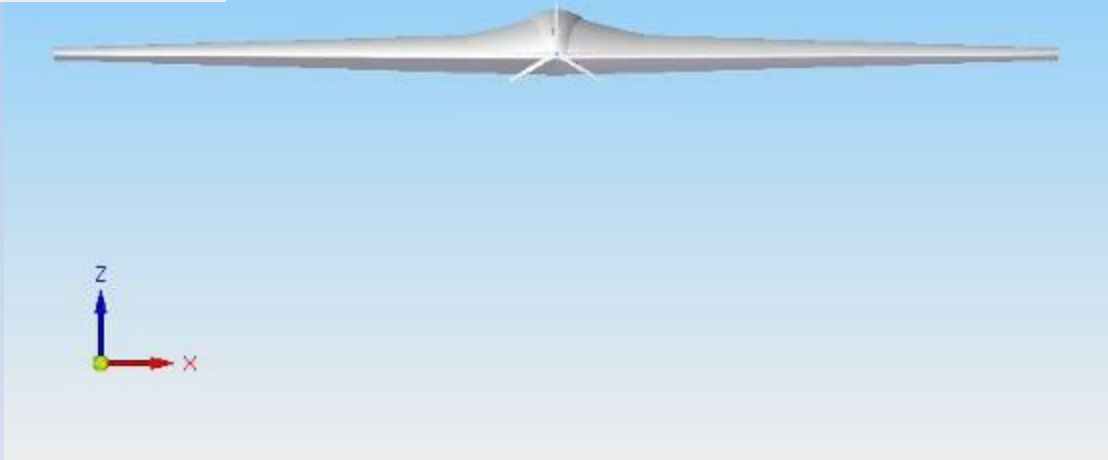

# Payload Installation

## Requirements

- Design for minimal weight.
- As simple as possible.
- Extract to achieve optimal Field of View.
- Minimum Drag.

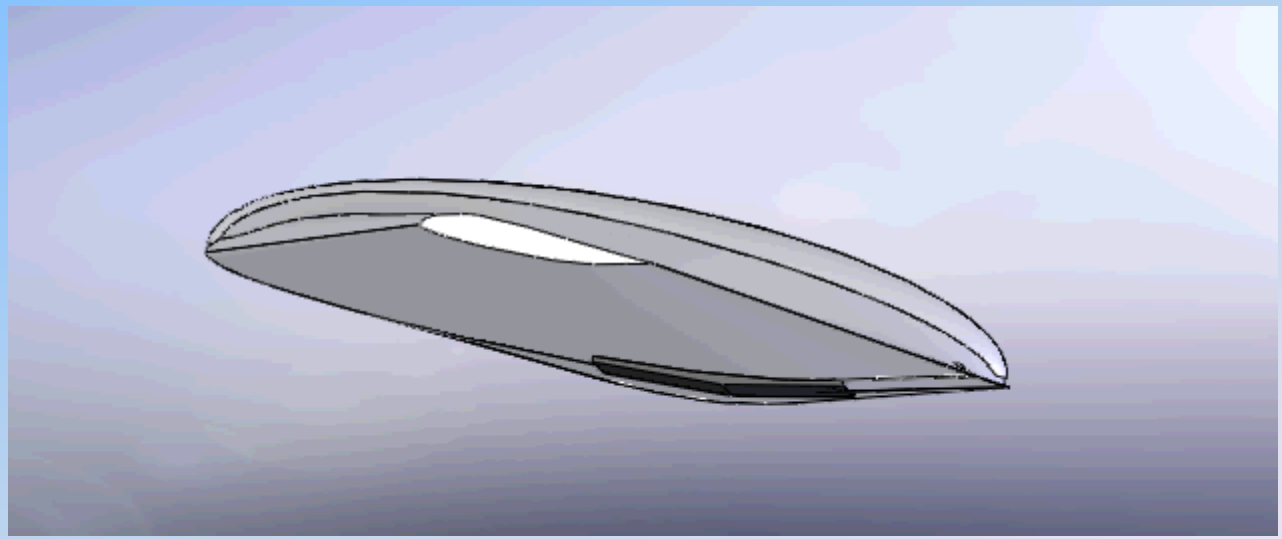

# Payload Installation

## First iteration.

- **Mechanism description:**

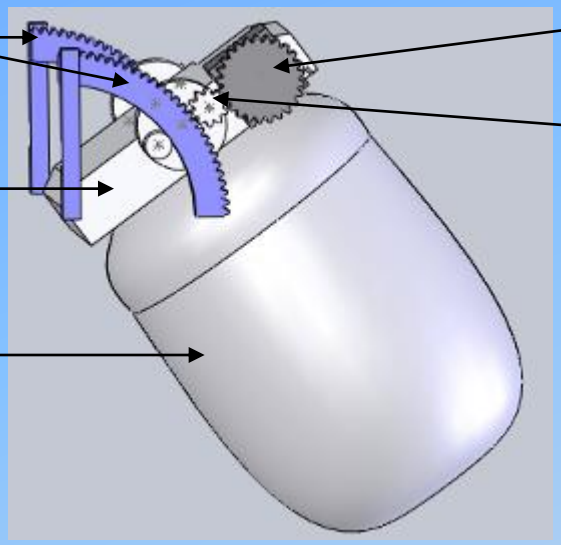


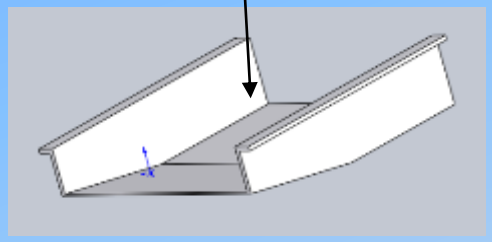


- **Weight table:**

| Part | Mass [kg] |
|---|---|
| Base | 0.953 |
| Sliding door | 0.507 |
| Rails | 0.232 |
| Main Rotary Actuator | 0.4 |
| Gears | 0.1 |
| Tiny Rotary Actuator | 0.2 |
| **Total estimation** | **2.3** |

Note: The sliding door motion is implemented by a tiny rotary actuator.

# Payload Installation

## First iteration.

- **Advantages:**
  - Permits to extract and to fold the payload, Improves Performance.
  - Permits to extract and fold several times.
- **Disadvantages:**
  - Too heavy.

**Iteration discarded due to Weight**

# Payload Installation

## Second iteration.

- **Mechanism description:**

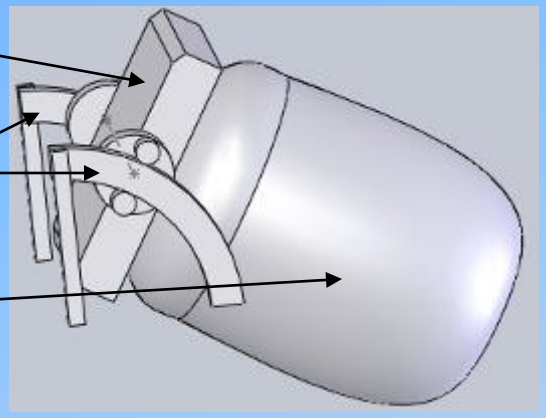


The components that were removed:

- A sliding door.
- A system of springs and retainers, permitting only the payload to get in the fuselage.
- A tiny rotary actuator assuring the sliding door closure.

- **Weight table:**

Note: The weight lowering is due to:
-The absence of a big rotary actuator.
-The absence of a gearing system.

| Part | Mass [kg] |
|---|---|
| Base | 0.847 |
| Sliding door | 0.507 |
| Rails | 0.210 |
| Tiny Rotary Actuator | 0.2 |
| **Total estimation** | **1.7** |
| **Weight improvement** | **0.6** |

# Payload Installation

## Second iteration.

- **Advantages:**
  - Less heavy than the first mechanism.
  - Simpler Mechanics.
- **Disadvantages:**
  - Heavy.
  - Permits only to fold the payload. Forces us to fly with the whole payload out (175x250 [mm]).

**Iteration discarded due to Aerodynamic Disturbances and Weight**

# Payload Installation

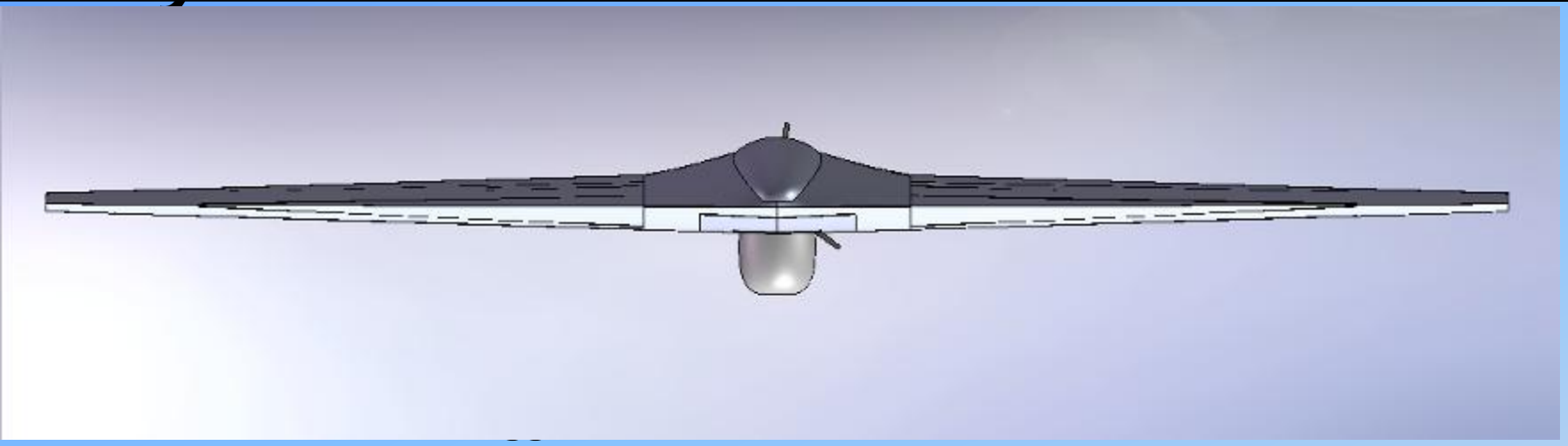

➢ **<u>No mechanism - The payload will be fixed to the fuselage.</u>**

- Advantages:
  - Very simple design.
  - Lighter than the other iterations.
- Disadvantages:
  - Creates aerodynamic disturbances all along the flight.
  - Forces us to land the UAV upside down in order to protect the payload from bumps.

# Fuel Cell Feasibility Study

## Introduction

•Fuel cells are miniature power plants that convert the chemical energy inherent in hydrogen and oxygen into direct-current electricity without combustion (Which grants better efficiency) .

•Hydrogen is pumped on the Anode, and Oxygen on the Cathode.

•The Catalyst Creates a chemical reaction that splits the Hydrogen into Protons and Electrons.

•The Electrons are diverted to an external circuit , creating electricity.

•The Protons are diverted through the membrane, forming Water with the oxygen on the Cathode, also using a catalyst.

•The process also releases heat.

•Each Fuel Cell produces ~0.7 Volts.

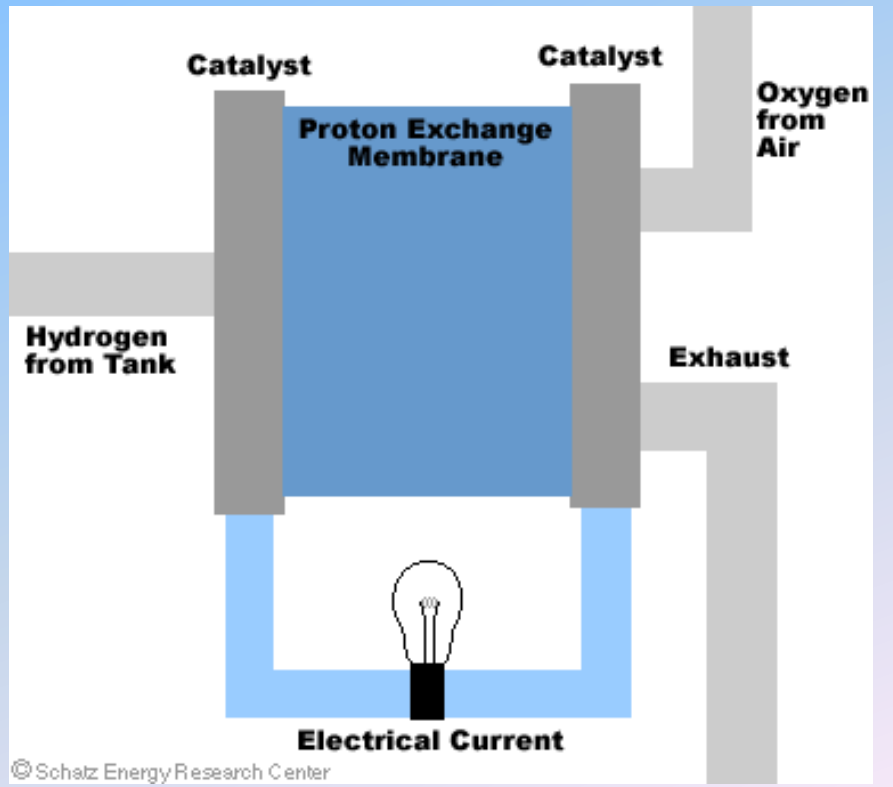

# Fuel Cell Feasibility Study

## Fuel Cell Types

- Fuel Cells can be categorized by two attributes: Membrane Type (Alkaline, Phosphoric Acid, Solid Oxide etc.) and Fuel source (Pure Hydrogen, Liquid Hydrocarbons , Natural Gas, Methanol etc.) .
- Some **relevant** Fuel Cell types:
  - **Proton Exchange Membrane fuel cell (PEM)**- Operate at relatively low temperatures (~80 degrees), have high power density, can vary their output quickly to meet shifts in power demand
  - **Alkaline Fuel Cells (AFC)** – Efficiencies are up to 70 percent. Use potassium hydroxide as the electrolyte and operate at ~70 degrees. However, they are very susceptible to carbon contamination, so require pure hydrogen and oxygen.
  - **Direct Methanol fuel cell (DMFC)** - The anode catalyst itself draws the hydrogen from Liquid Methanol, eliminating the need for a fuel reformer. Efficiencies of about 40% are expected with this type of fuel cell, which would typically operate at a temperature between 50-80 degrees.

# Fuel Cell Feasibility Study

## Horizon 1000H Fuel Cells

Type of fuel cell.....PEM
Number of cells .....64
Rated power .....1000W
Performance ..... 36V @30A
DC voltage .....13V
Purging valve voltage .....12V
Blower voltage .....12V
Reactants.....Hydrogen and Air
External temperature .....5 to 35°C
Max stack temperature .....65°C
Composition .....99.99%dry H2
H2 Pressure .....0.5 atm
Flow rate at rated output .....**14 l/min**
Humidification.....self-humidified
Cooling.....Air (integrated cooling fan)
Weight (with fan & casing ).....5500 (grams)
Dimensions .....315mm x 92mm x 210mm
Start up time.....Immediate
Efficiency of stack.....45% @ 36V

# Fuel Cell Feasibility Study

## Horizon 1000H –Hydrogen Weight Estimation

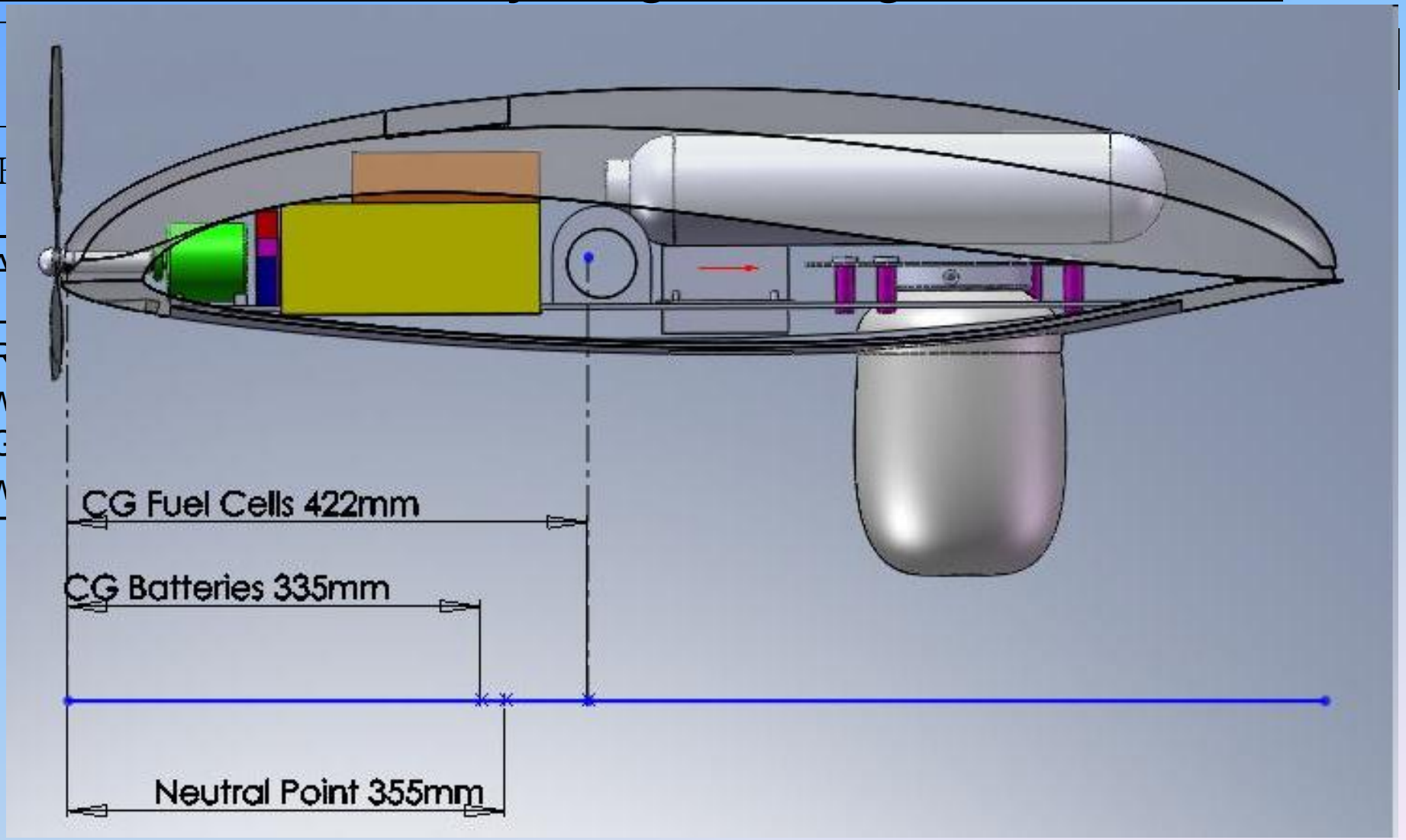

# RCS-radar cross section

## How to get low RCS?

•Decreasing the RCS by planning a configuration without external systems, and placing the systems (including the armament) into the body.

lectrical properties similar to free space.
ate
. T
is

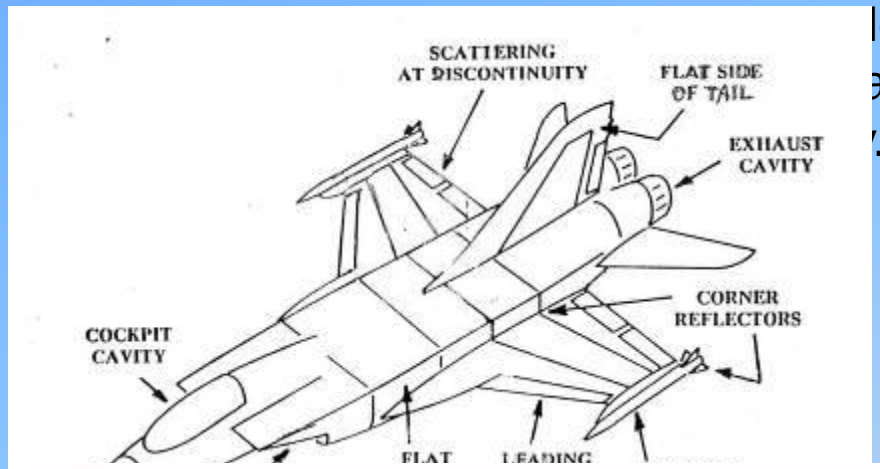


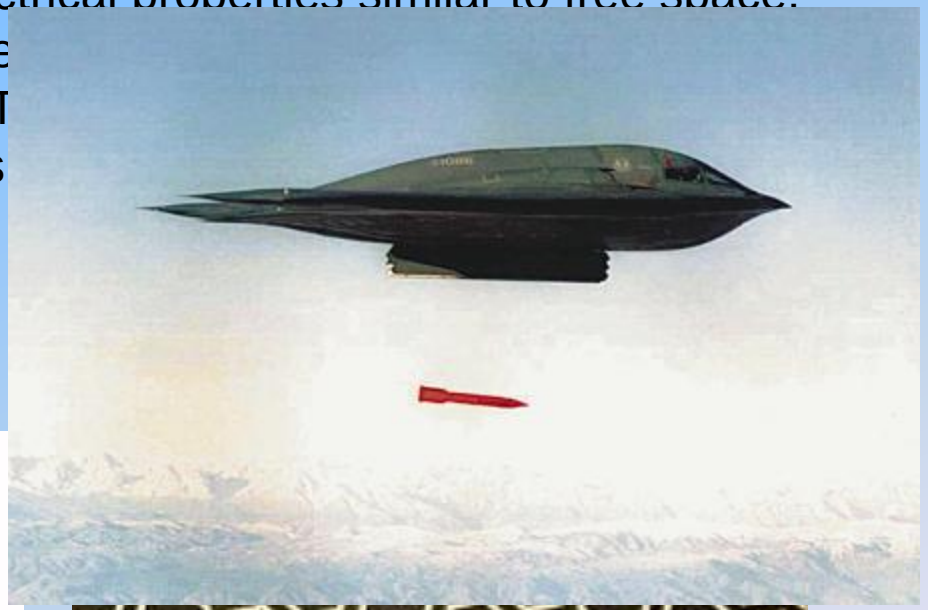

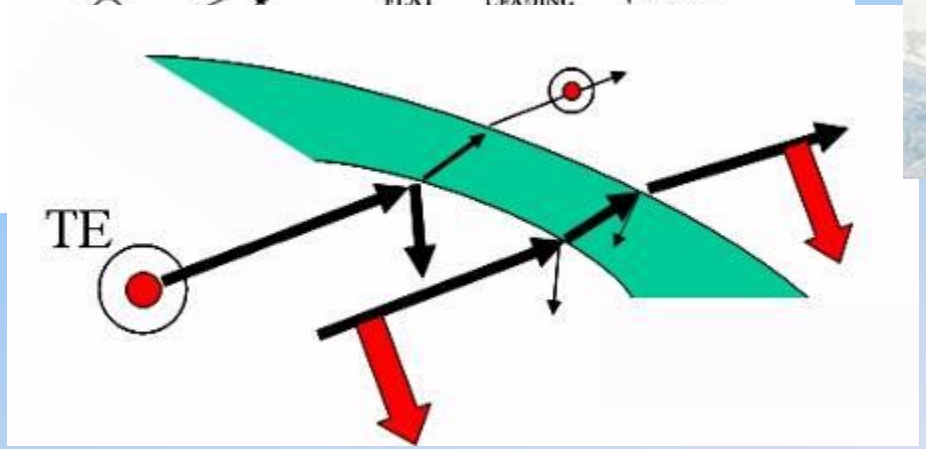


# RCS-radar cross section

## Continuous curves

**The F/A-22 uses a combination of different ways to keep radar waves from bouncing back to their origin. The most sophisticated system is the use of so-called continuous curvature.**

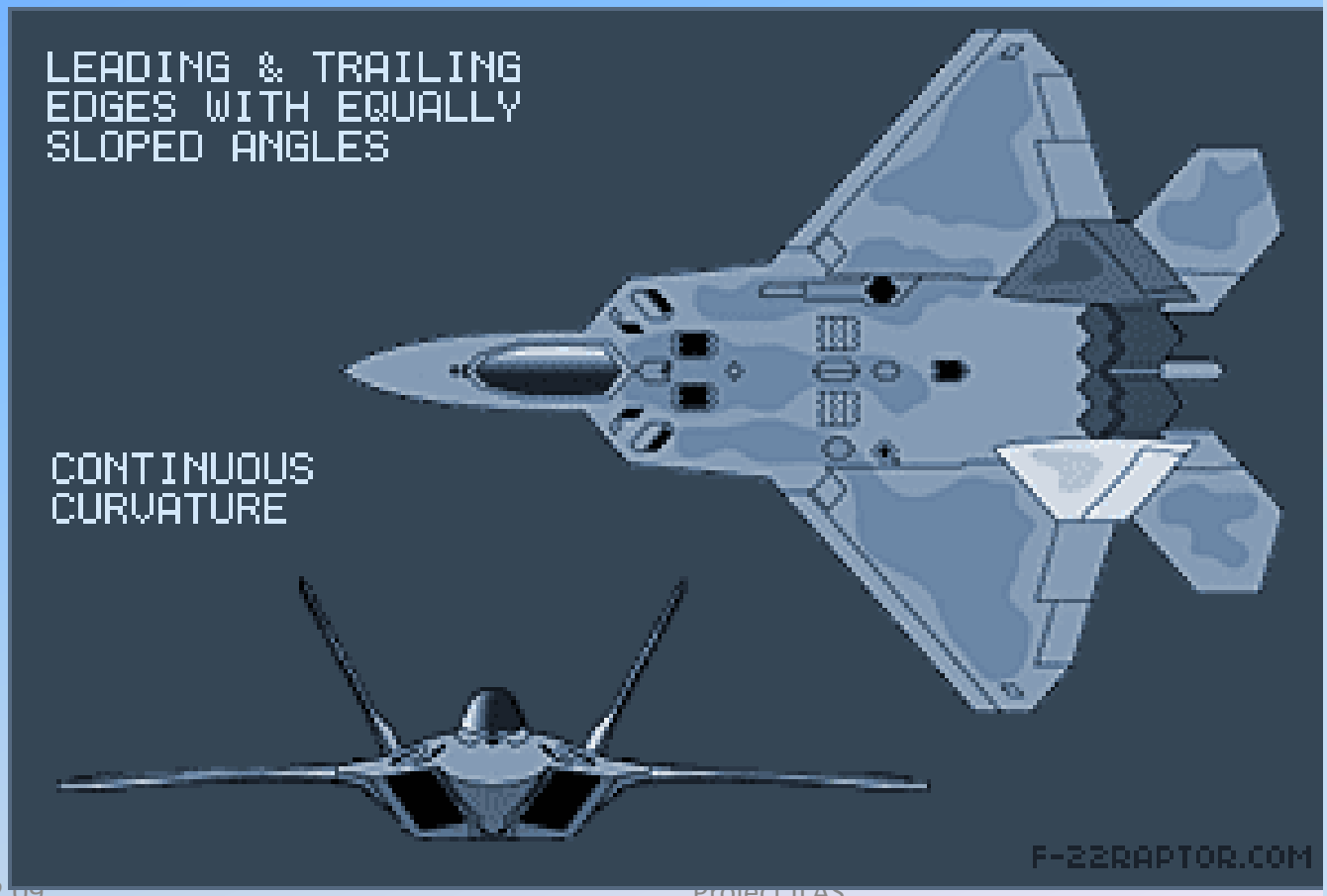


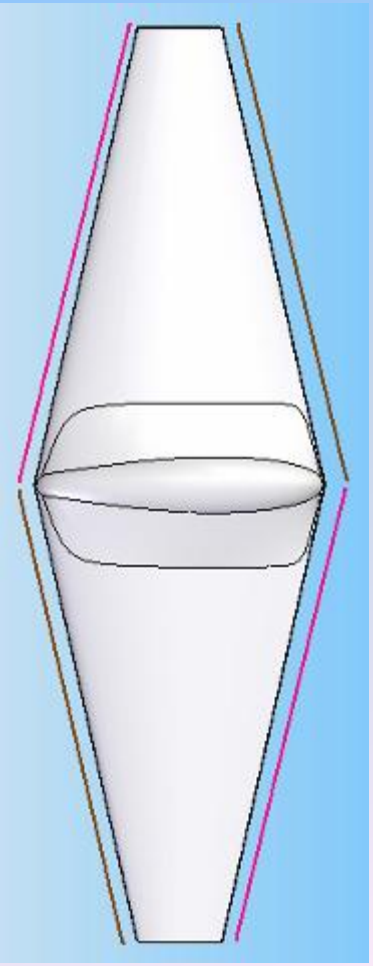

# RCS-radar cross section

**RCS analysis with POfacets software**

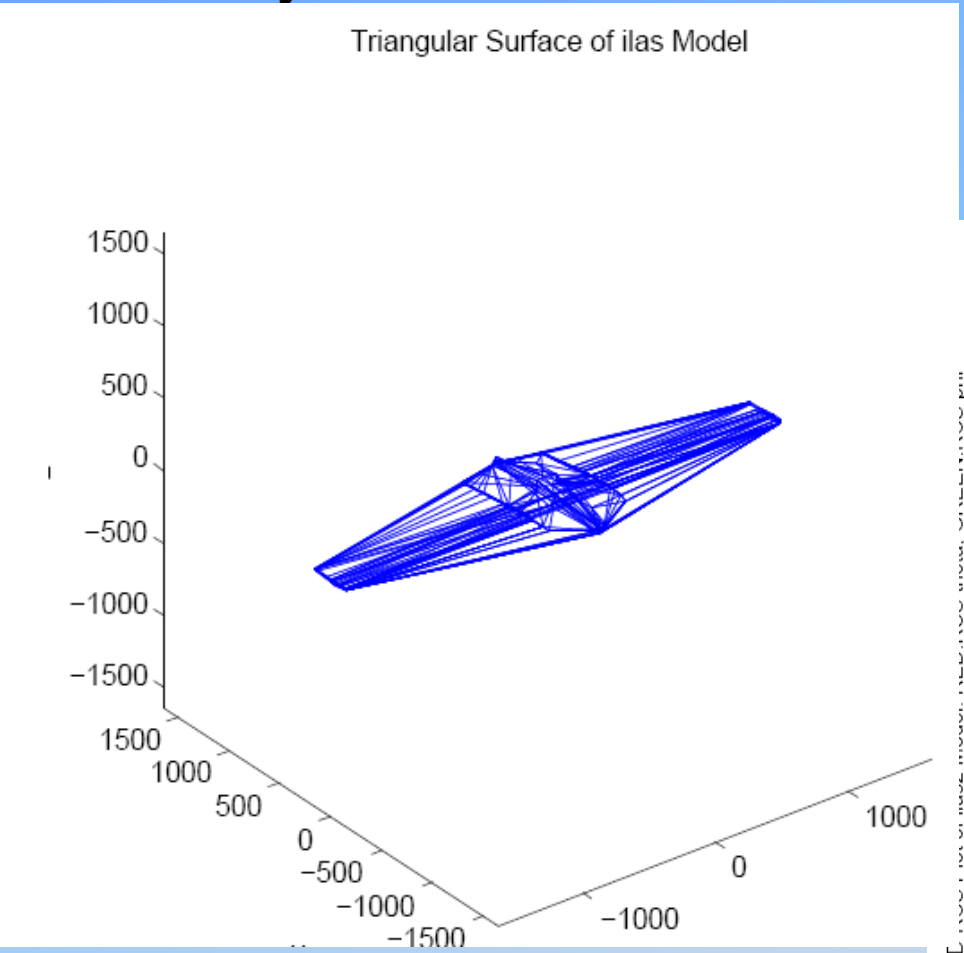


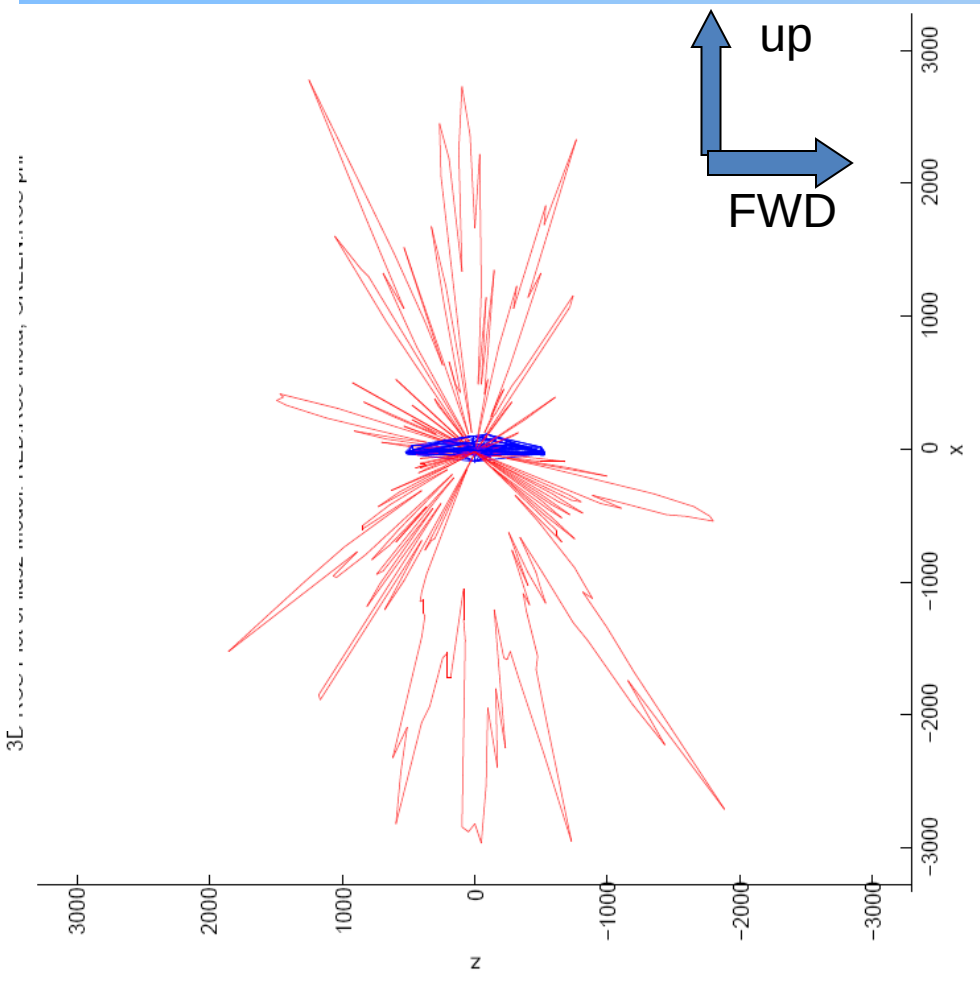

# RCS-radar cross section

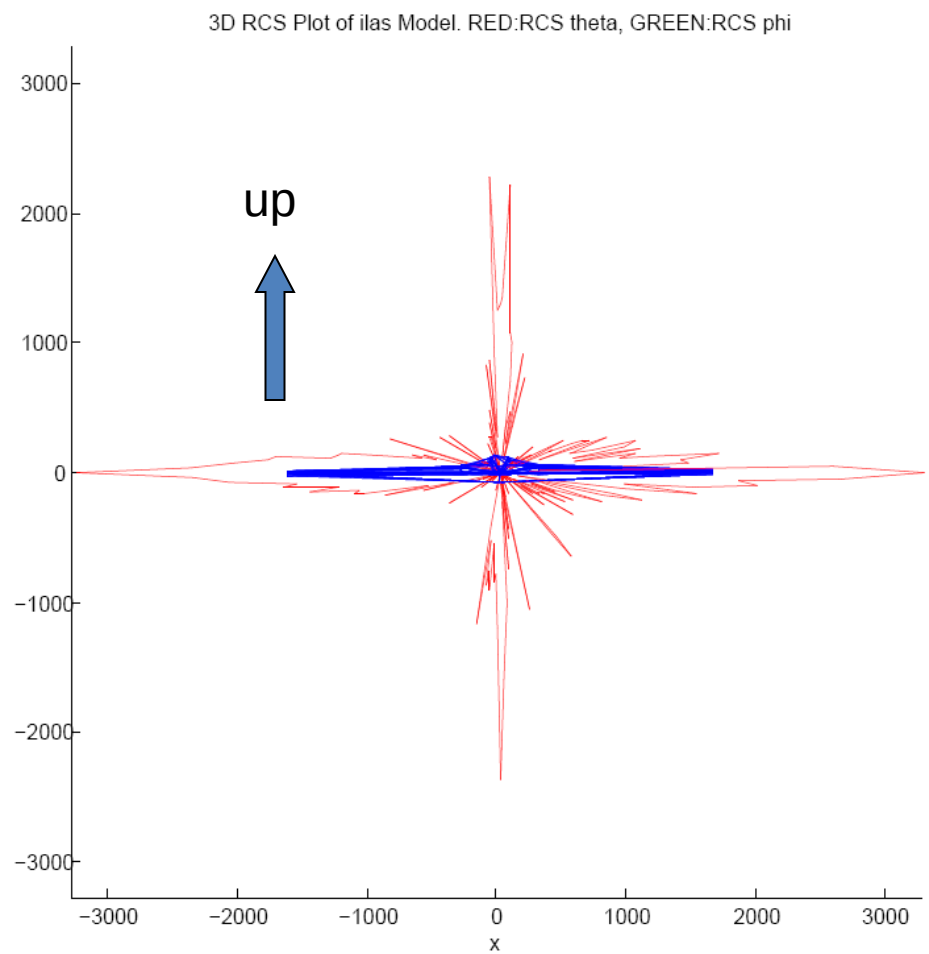


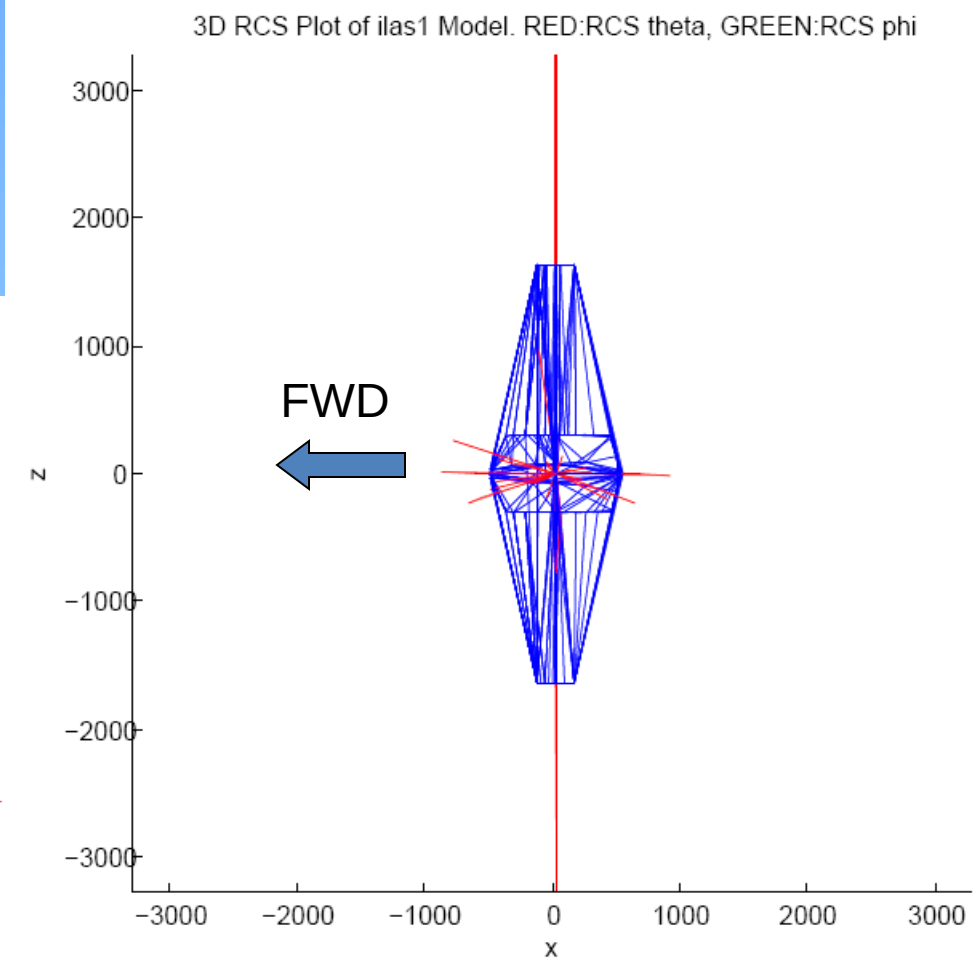

# Performance Calculations

## Performance Calculations - Contents

- Flight Envelope and Maneuver Graphs.
- Elevon + Splitter Design.
- Stability and Control.

# Performance Calculations

## Performance Calculations

Flight Zone

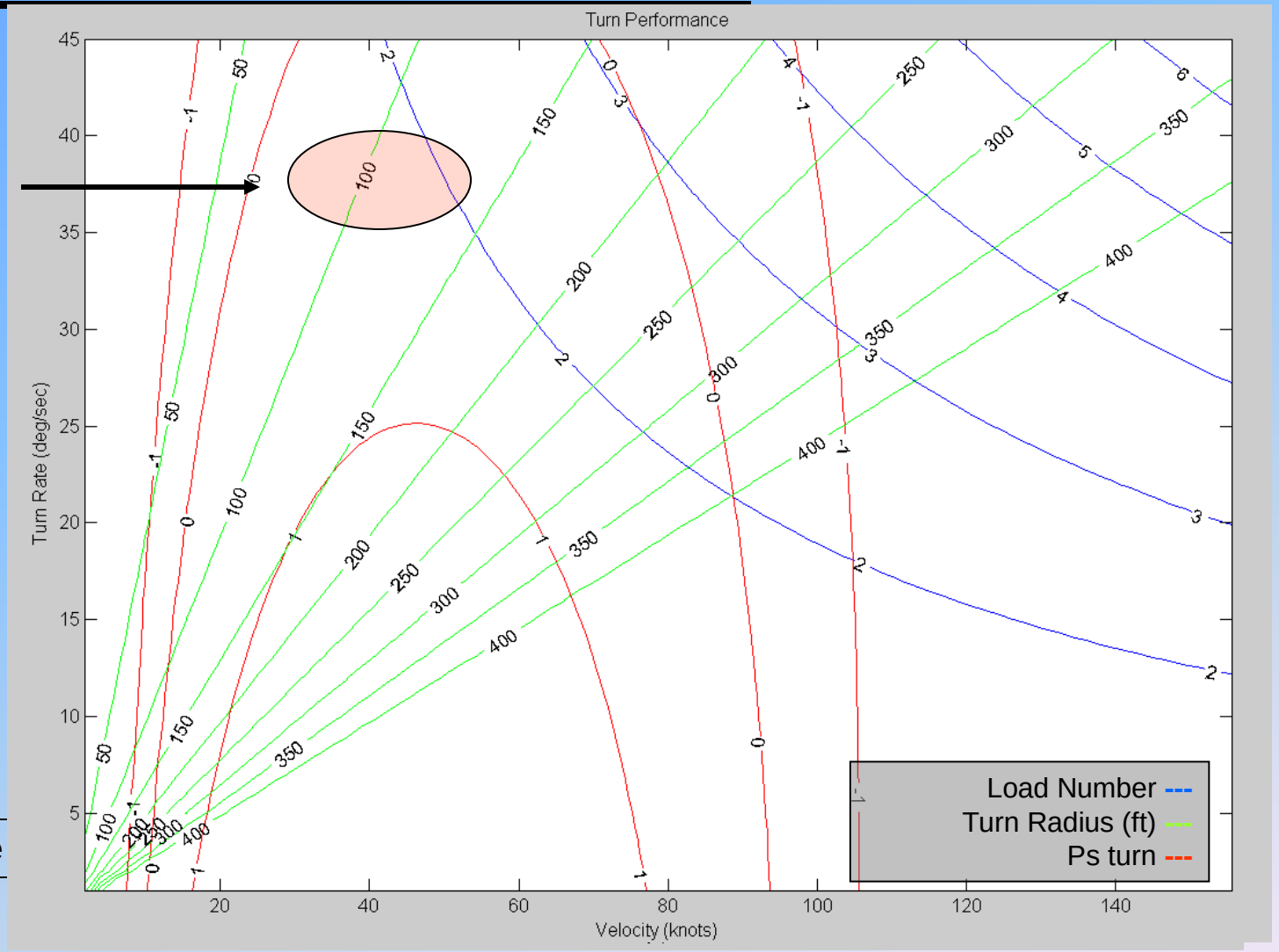


Flight Zone

# Performance Calculations

## Control Surfaces

ILAS UAV is designed as a Flying-Wing Tailless configuration. In addition, ILAS is launched and recovered using a catapult and a parachute (respectively), which obsoletes the need in flaps.

Therefore, the only control surfaces on the UAV will be Elevons: Rudders + Elevators with Splitters.

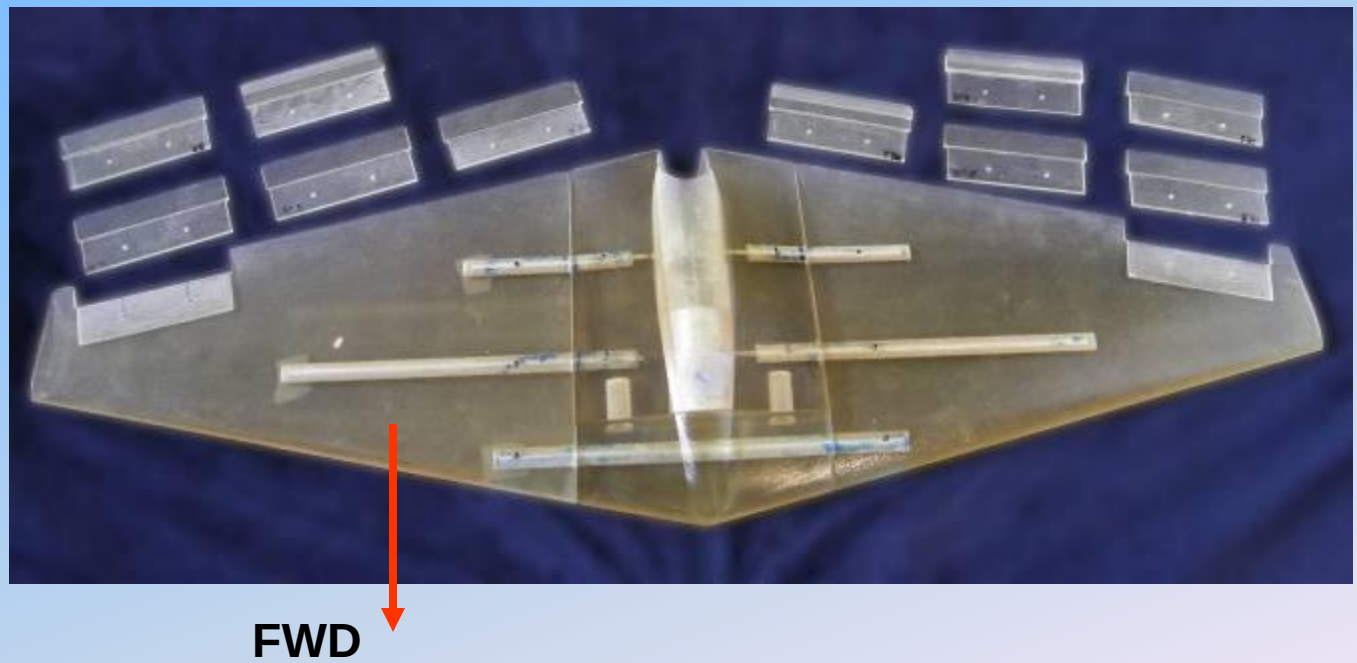

# Performance Calculations

## Elevon Design

- Assumptions (Customer requirements):
  - Roll Rate 40-70 deg/sec
  - Yaw Rate 20-60 deg/sec
  - Sideslip Angle = 11 deg
  - Maximum Elevon Angles : 15 deg.
  - Splitter Design
  - Swept Back Wings (11 degrees).
- **Equations**

$$C_\ell = C_{\ell\beta}\beta + C_{\ell p}p + C_{\ell_r}r + C_{\ell\delta_a}\delta_a + C_{L_{\delta s}}\delta_s$$

$$C_n = C_{n\beta}\beta + C_{np}p + C_{nr}r + C_{n\delta_a}\delta_a + C_{n_{\delta s}}\delta_s$$

# Performance Calculations

## Elevon Design

**First Iteration:**

Roll Rate = 40 deg/sec
Yaw Rate = 20 deg/sec
Elevon Width = 70mm.

→ **Length = 190mm**
**Width = 70mm**
**Split angle = 5 deg**

**Second Iteration:**

Roll Rate = 50 deg/sec
Yaw Rate = 40 deg/sec
Elevon Width = 70mm

→ **Length =220mm**
**Width = 70mm**
**Split angle = 6 deg**

**Third Iteration:**

Roll Rate = 70 deg/sec
Yaw Rate = 60 deg/sec
Elevon Width = 70mm

→ **Length = 320mm**
**Width = 70mm**
**Split angle = 9 deg**

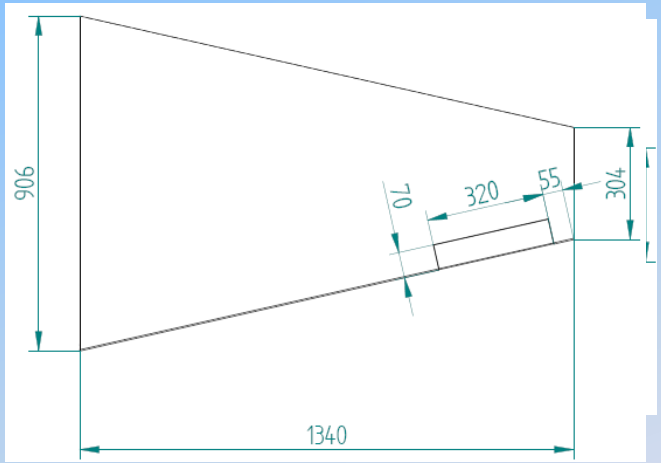

# Performance Calculations

## Elevon Design – Chosen Configuration

**Length = 320mm**

**Width = 70mm**

**Split angle = 9 deg**

→

**Maximal Roll Rate = 70deg/sec**

**Yaw Rate = 60deg/sec**

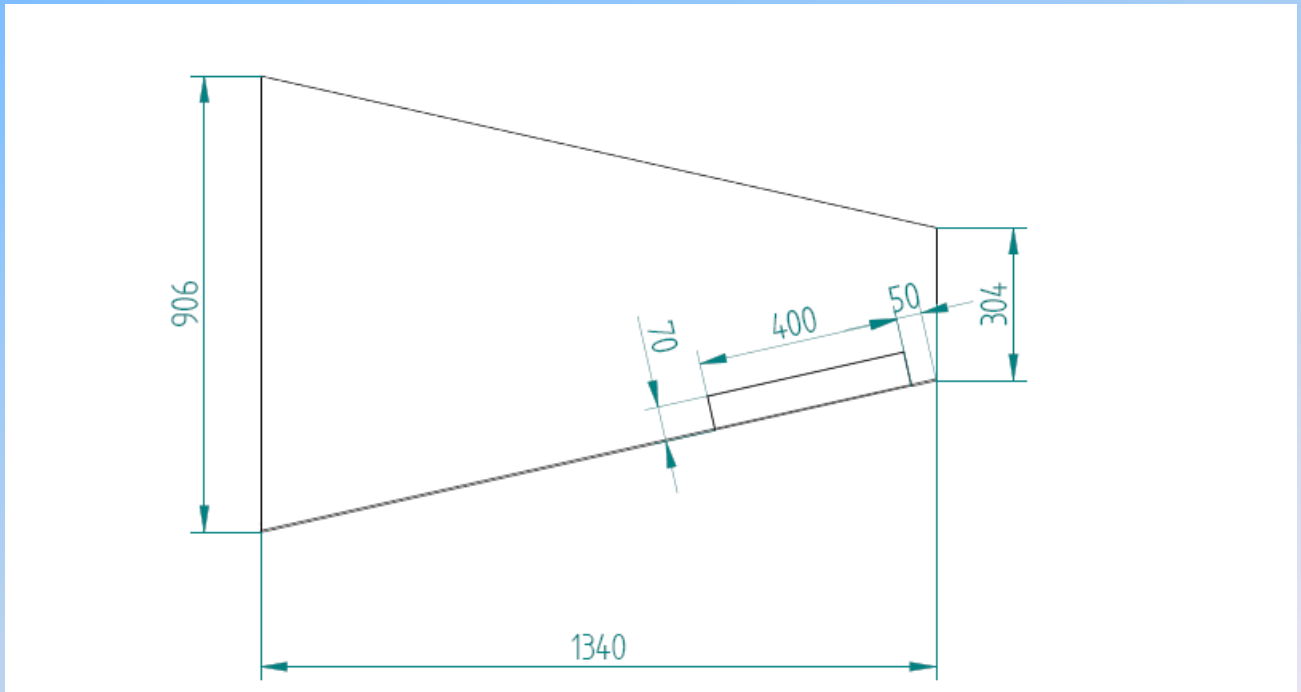

# Performance Calculations

## Stability and Control - Longitudinal

**Original Transfer Function**

$$\frac{\theta(s)}{\delta_e(s)} = \frac{-0.71(s+0.104)(s+4.9587)}{(s^2+0.0175s+0.39)(s^2+5.2s+47.89)}$$

Adding a standard control loop

"Phugoid" Reaction

$$\xi_{ph} = 0.014$$

$$\omega_{ph} = 0.625$$

"Short Period" Reaction

$$\xi_{sp} = 0.376$$

$$\omega_{sp} = 6.92$$

**Underdamped!**

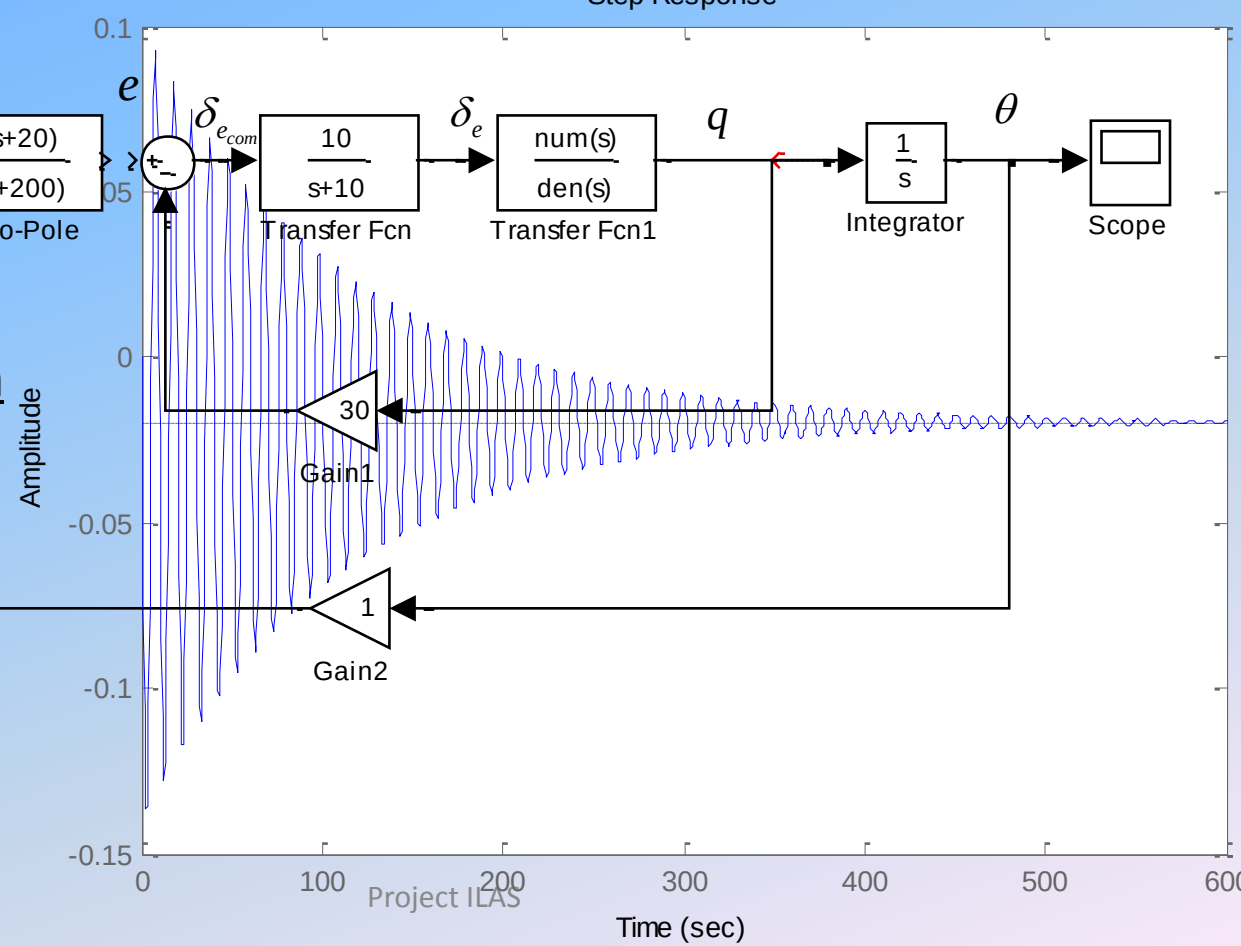

# Performance Calculations

## Stability and Control - Longitudinal

**New Closed Loop Step Response**

$$\frac{\theta}{\theta_{com}}$$

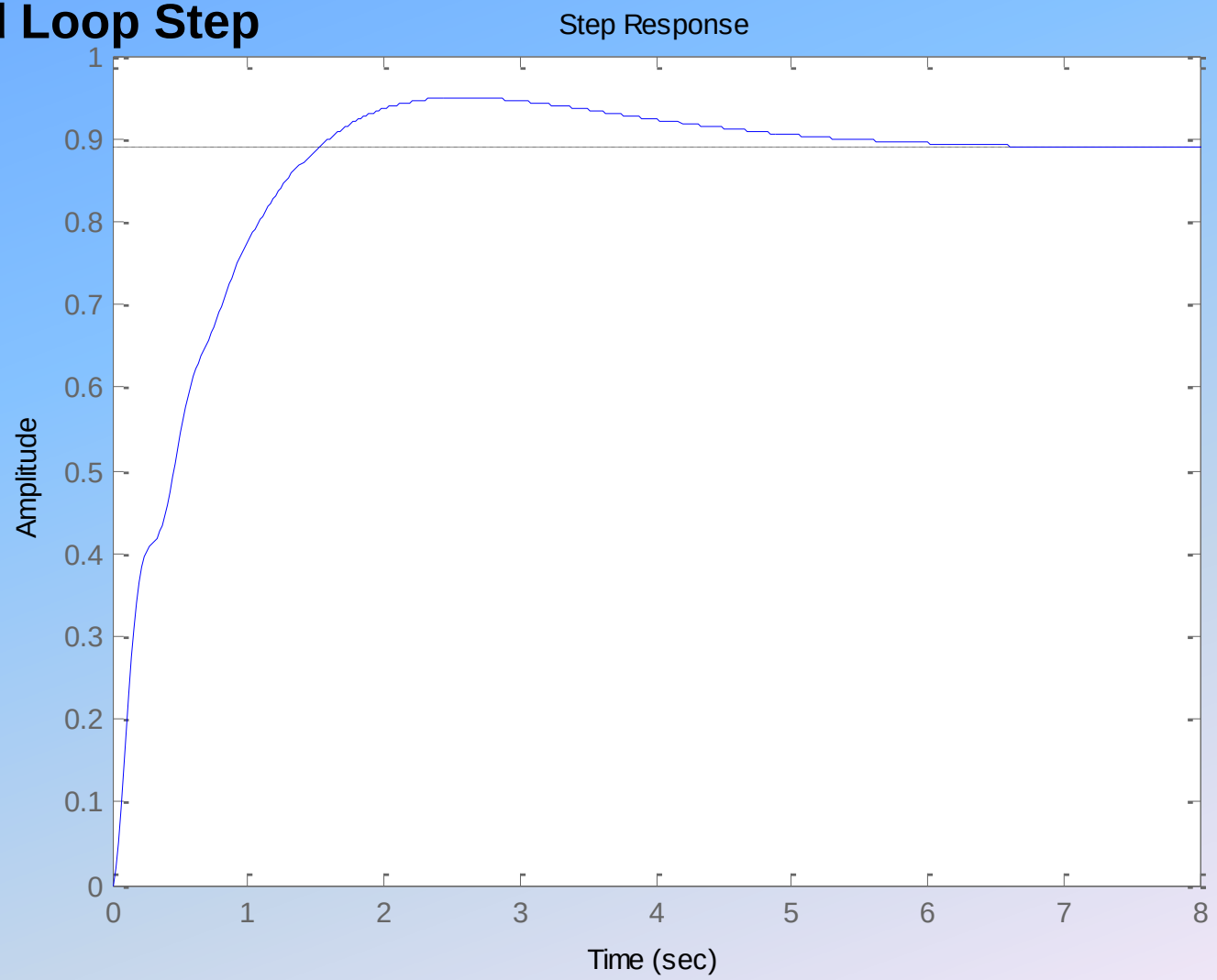

# Performance Calculations

## Stability and Control - Lateral

**Open Loop Transfer Function**

$$\frac{\phi(s)}{\delta_a(s)} = \frac{12.95s^2 + 2.422s + 10.1}{s^4 + 9.677s^3 + 18.96s^2 + 85.24s - 0.1127}$$

$$\xi = 0.168$$

$$\omega = 3.14$$

**Unstable!**

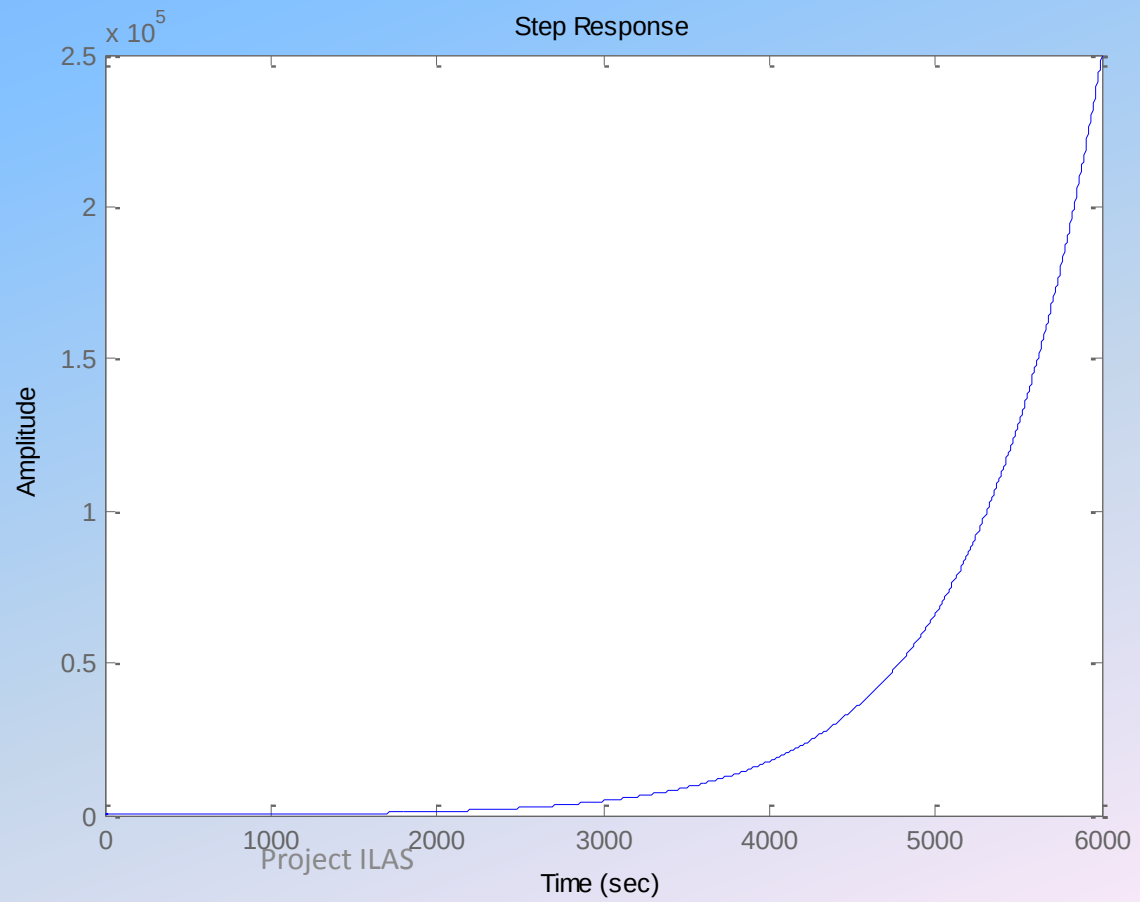

# Performance Calculations

## Stability and Control - Lateral

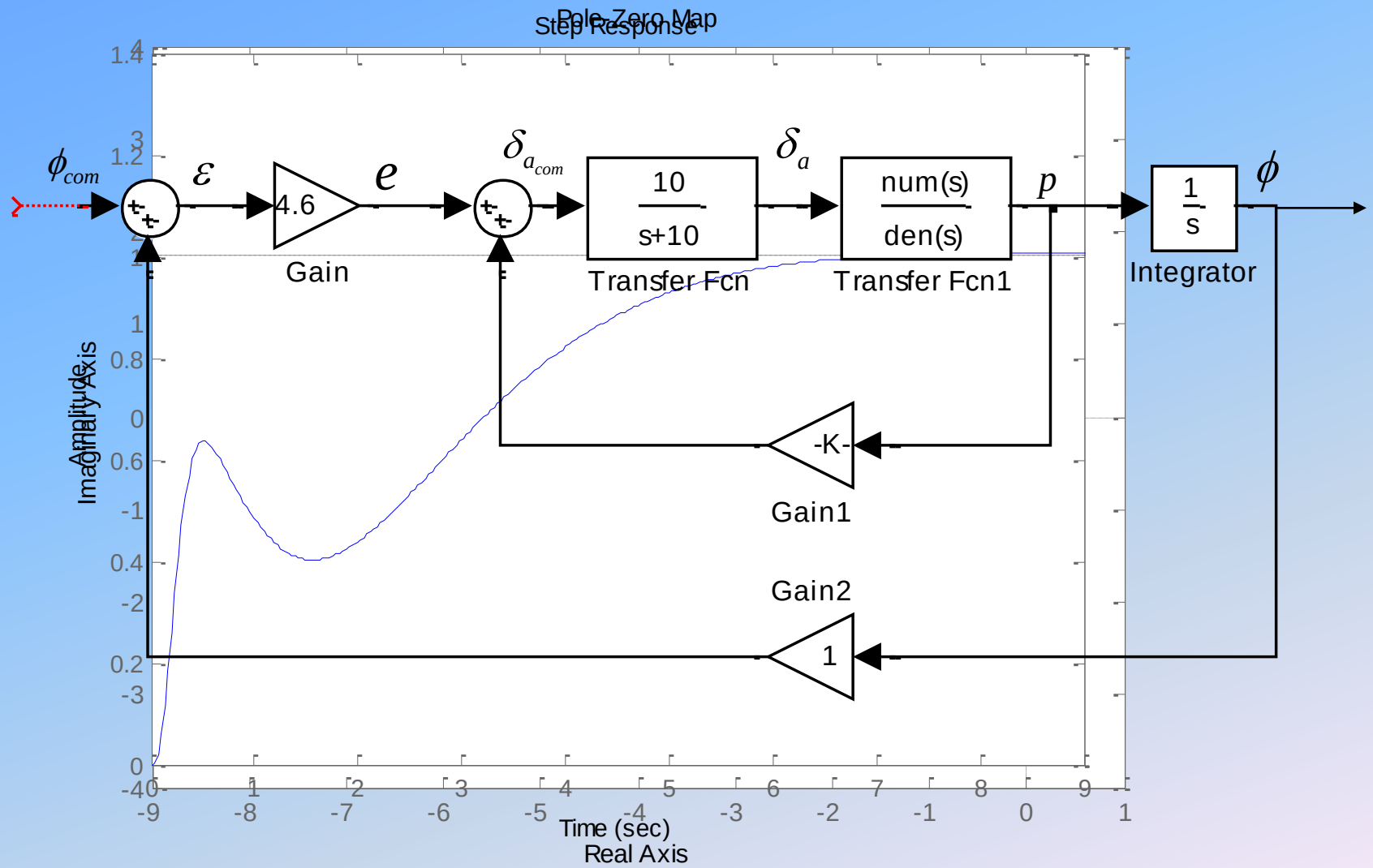

# W

## Ge

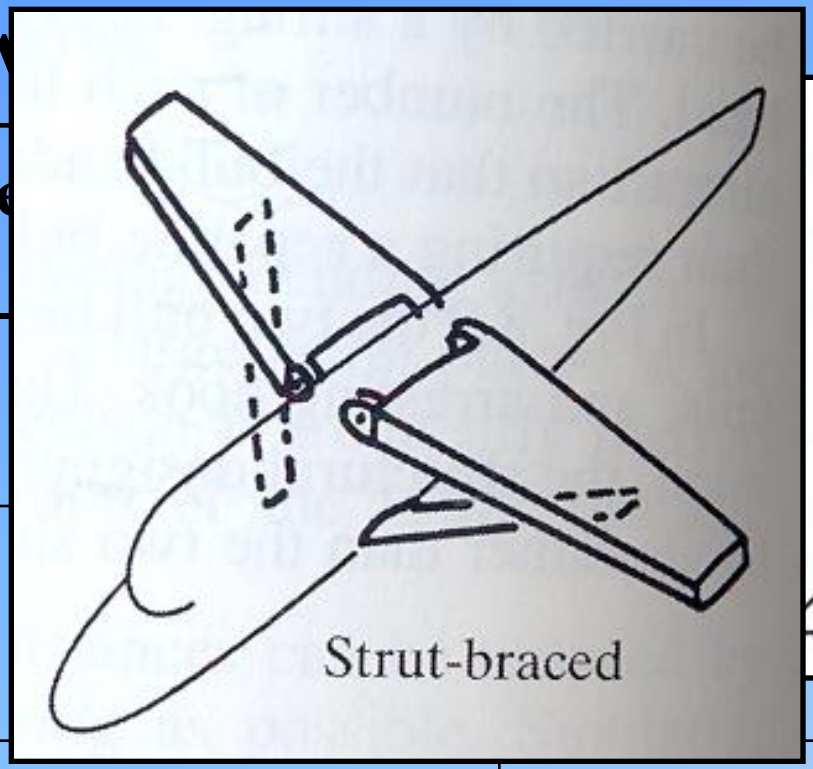


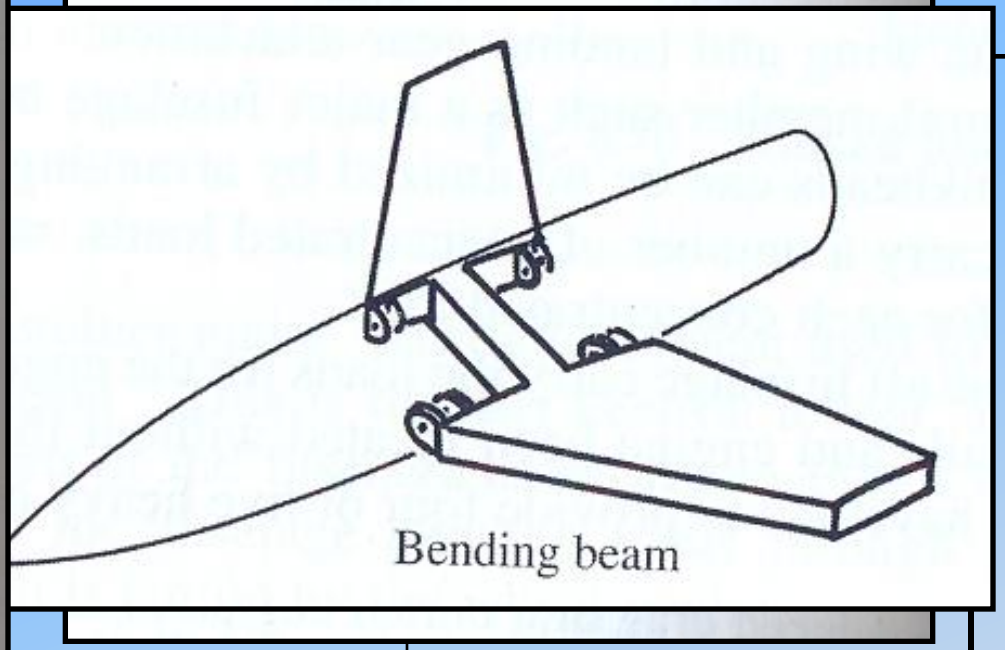


| | |
|---|---|
| Ring Frames | Drag reduction |
| Bending Beam<br>“compromise” between 2 first configurations | * Bending momen<br>beam that conne<br>pan<br>*Less fusela |
| Strut Braced | Lightest co |

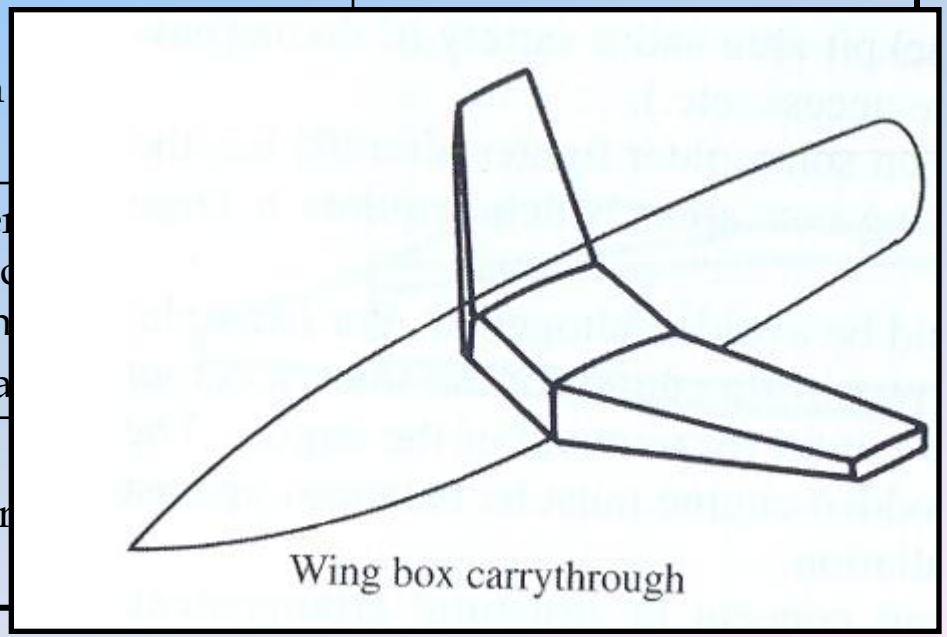

# Wing Configuration

## General Wing Configuration – Leading Principles:

* Lift forces on the wing produce a large bending moment at the Wing Root, requiring a strong wing structure
* Structural simplicity
* Light weight
* Maintainability and Availability
* Lack of pilot and passengers allows passing a beam through the fuselage

**Bending Beam Configuration**

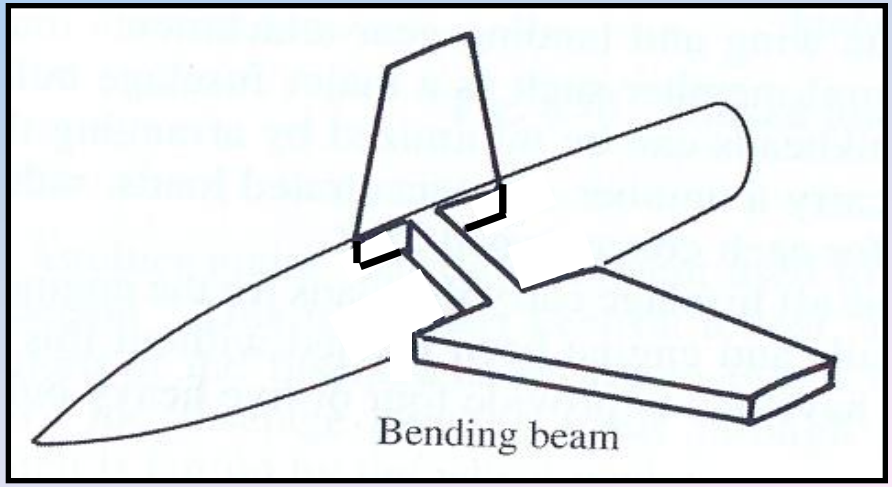

# Wing Configuration

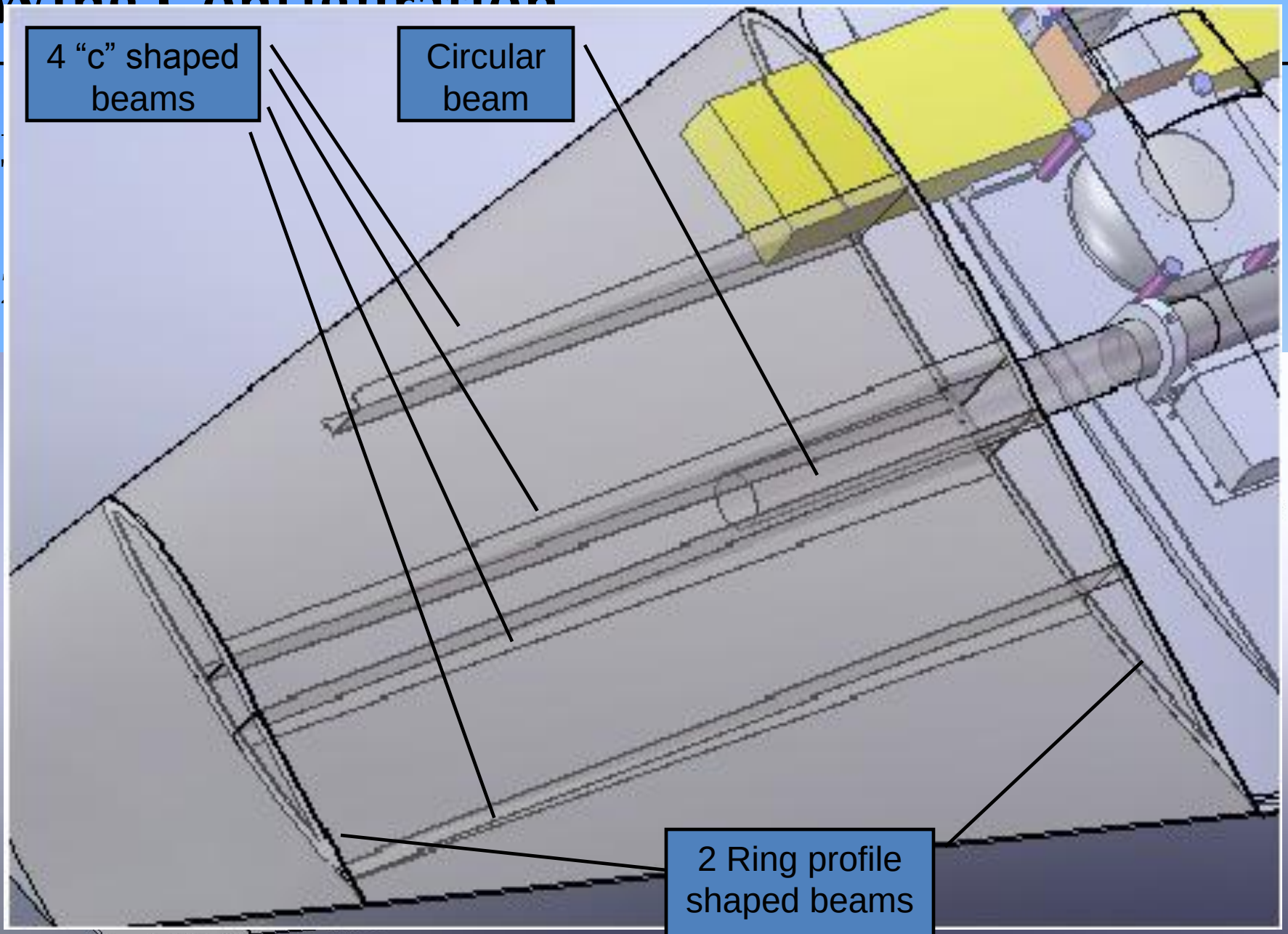

# Wing Configuration

Computing required thickness of a beam with circular section:

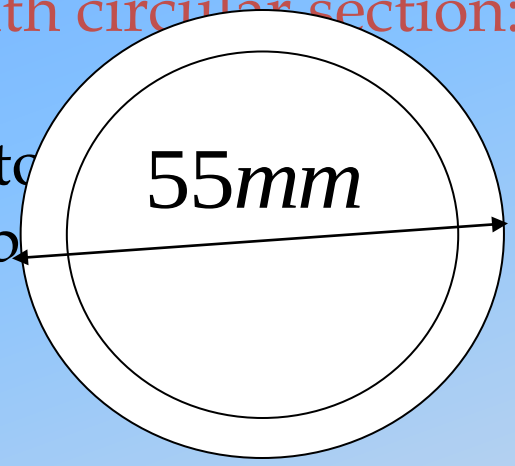


* The beam is located as closest as possible to
(p.c) in a way that matches the UAV comp

$\Downarrow$

external diameter=Dbeam=55mm=0.055m

**Trapezoidal and elliptical wing lift distribution:**

$$L_{\max} = n_{\max} \cdot W = 2 \cdot 23kg \cdot g = 450.08N$$

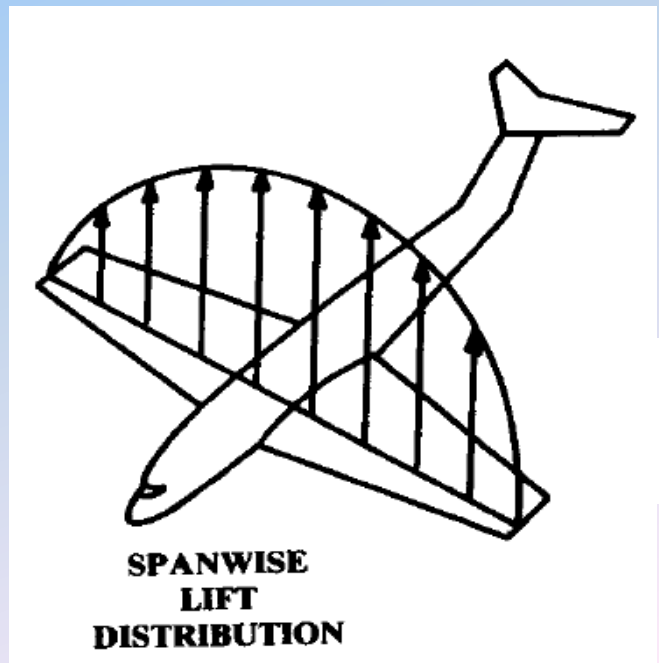

# Wing Configuration

$$l = \frac{b}{2} = 3280mm/2 = 1.64m$$

$$P = concentrate\ \ force = \frac{L_{\max}}{2} = 225.04N$$

$$X_{p(\,for\,linear\,lift\,distribution)} = \frac{l}{3} = 0.55m$$

$$M_{\max} = M(x=0) = P \cdot \frac{l}{3} = 124N \cdot m$$

$$B = 55mm/2 = 27.5mm = 0.0275m$$

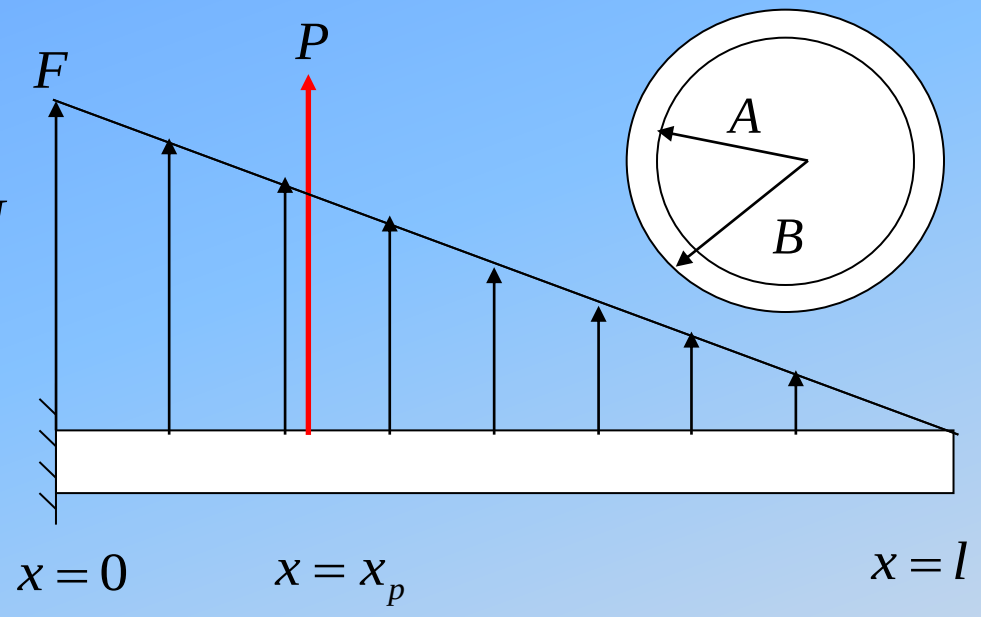


$$\boxed{moment\ \ of\ \ inertia\ \ for\ \ circular\ \ section:}\quad I = \frac{\pi}{4}(B^4 - A^4) = \frac{\pi}{4}(5.72 \cdot 10^{-7} - A^4)m^4$$

$$\boxed{\max\ bending\ \ stress:}\quad \sigma_{z_{\max}} = \frac{M_{\max} y}{I} = \frac{124N \cdot m \cdot 0.0275m}{\frac{\pi}{4}(5.72x10^{-7} - A^4)m^4} =$$

$$\frac{4.3}{(5.72x10^{-7} - A^4)}\frac{N}{m^2} = \frac{4.3 \cdot 10^{-5}}{(5.72x10^{-7} - A^4)}\frac{kg}{mm^2}$$

# Wing Configuration

## steel vs. aluminum beam comparison

| Aluminum 2024 | steel |
|---|---|
| $density: = 2700 \cdot 10^{-9} \, kg/mm^3$ | $density: 7800 \cdot 10^{-9} \, kg/mm^3$ |
| $yield\ stress: \ 70Mpa = 700 \, kg/mm^2$ | $yield\ stress: \ 250Mpa = 2500 \frac{kg}{mm^2}$ |
| $\rightarrow A = 26.73mm$ | $\rightarrow A = 27.3mm$ |
| $\rightarrow thickness: B - A = 0.77mm$ | $\rightarrow thickness: B - A = 0.2mm$ |
| $beam\,volume: \pi l (B^2 - A^2) = 4.76x10^{-5} m^3$ | $\rightarrow 0.8mm$ |
| $mass: 4.76x10^{-5} m^3 \cdot 2700 \frac{kg}{m^3} = 0.13kg$ | $beam\,volume: \pi l (B^2 - A^2) = 4.76^{-5} m^3$ |
| | $mass: 4.76^{-5} m^3 \cdot 7800 \frac{kg}{m^3} = 0.37kg$ |

# Wing Configuration

## Computing the "C" beam thickness

Assumptions:

1. Beam height (a) decreases linearily through the wing
2. Flanges length (b) is constant through the wing
3. Distance between 2 beams is constant – 55mm (diameter of circular beam)

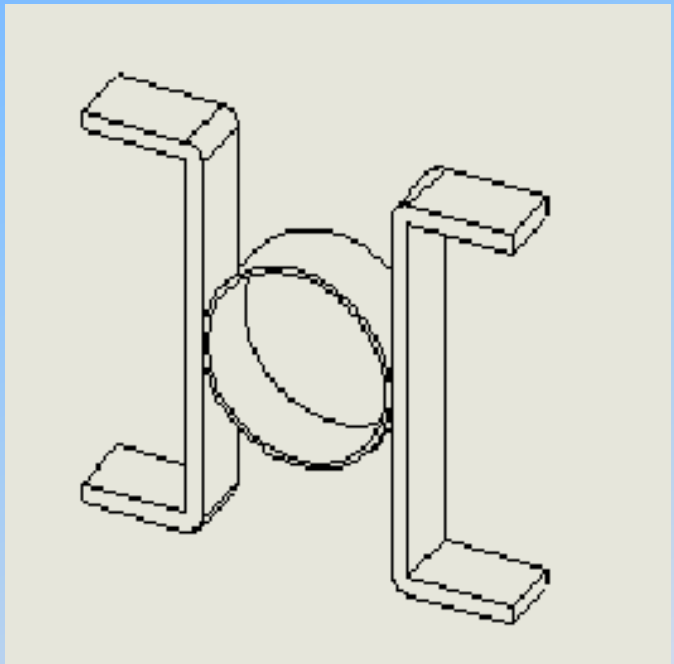

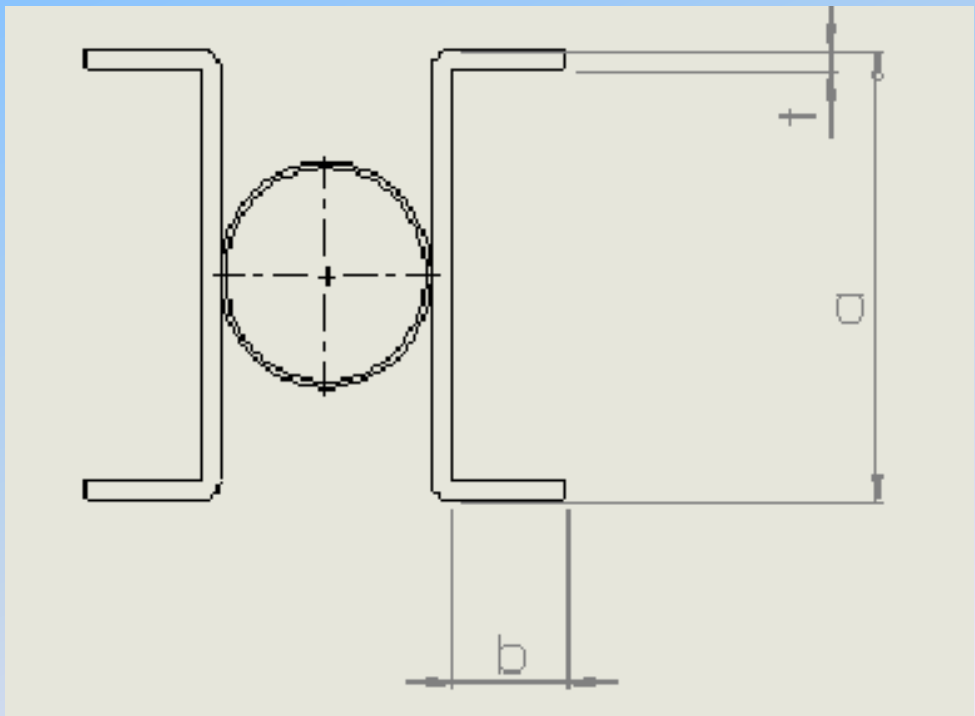

# Wing Configuration

$$\frac{F \cdot l}{2} = P$$

$$F = \frac{2P}{l}$$

$$f(x) = -\frac{2P}{l^2}x + \frac{2P}{l}$$

$$M(x) = -\frac{P}{3l^2}x^3 + \frac{P}{l}x^2 - Px + \frac{Pl}{3}$$

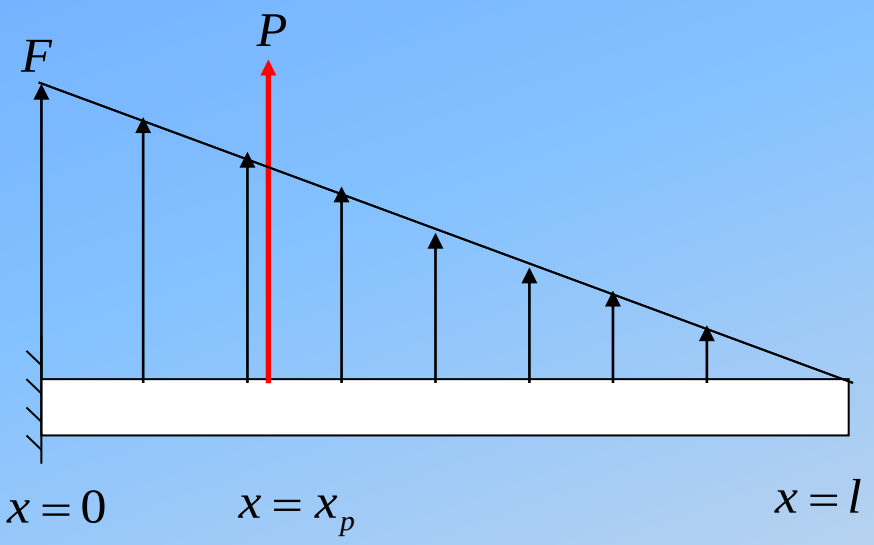


$a(x)$ *with linearity assumption* :

$$x = 0 : a = 110mm$$

$$x = l : a = 30mm$$

$$m = -\frac{80}{l}$$

$$a(x) = -\frac{80}{l}x + 110$$

$I(x)$ – *moment of inertia* :

assumption:
b=10mm

$$I = \bar{I} + d^2 A$$

$$I = 2(I_1 + I_2 + I_3)$$

$$I_2 = I_3$$

$$I = 2I_1 + 4I_2$$

$$I_1 = \frac{(a-2t)t^3}{12} \qquad I_2 = \frac{tb^3}{12} + (\frac{a-t}{2})^2 bt$$

$$I = \frac{(a-2t)t^3}{6} + \frac{tb^3}{3} + (a-t)^2 bt$$

# Wing Configuration

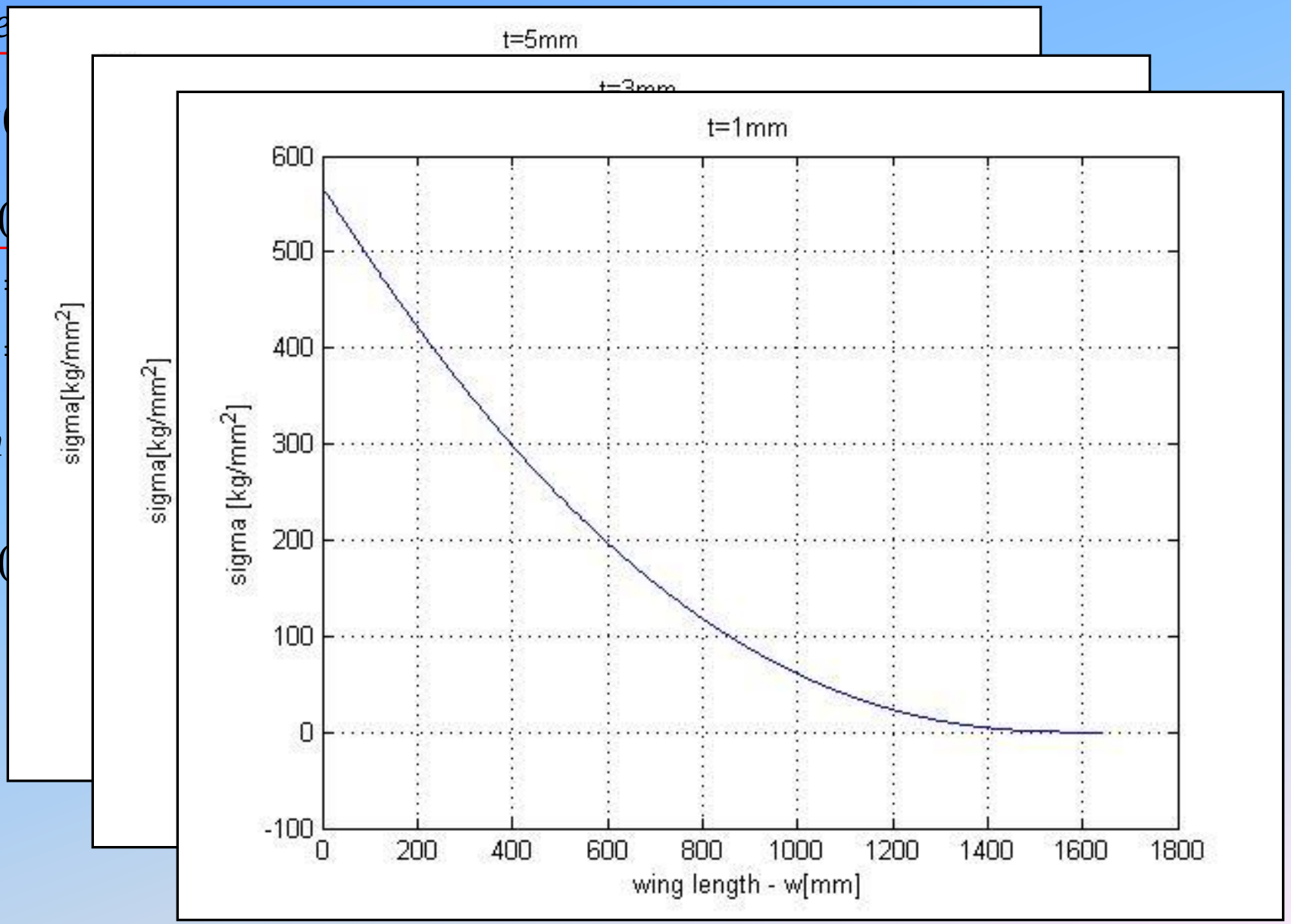

# Wing Configuration

| Composite material – Carbon Epoxy | Aluminum |
|---|---|
| $\sigma_{yield} = 6000 kg / mm^2$ <br> $\rho_{comp} = 1600 \, kg/m^3$ | $\sigma_{yield} = 700 kg / mm^2$ <br> $\rho_{al} = 2730 \, kg/m^3$ |

**for both materials: sigma yield > max bending stress (t=1mm)**

**choosing the lighter material**

**Carbon – Epoxy beams**

# Wing Configuration

## "C" shaped beams weight:

$$beam\ section\ area:$$

$$A = at + 2t(b-t)$$

$$A = (\frac{-80}{l}x + 110)t + 2t(b-t)$$

$$t = 1mm \qquad b = 10mm$$

$$A(x) = -\frac{80}{l}x + 128$$

$$beam\ volume:$$

$$V = \int_0^l A(x)dx = 88 \cdot l\,[mm^3] = 88 \cdot l \cdot 10^{-9}\,[m^3] = 8.8 \cdot 10^{-5}\,[m^3]$$

$$\Rightarrow beam\ weight:$$

$$m = \rho_{composite} \cdot V = 1600\frac{kg}{m^3} \cdot 8.8 \cdot 10^{-5}\,m^3 = 0.14kg$$

# Wing Configuration

## 5 Configurations for wing filling:

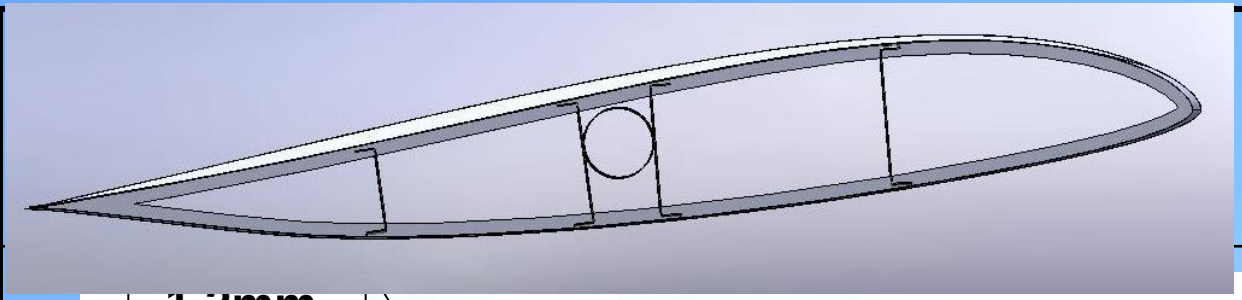

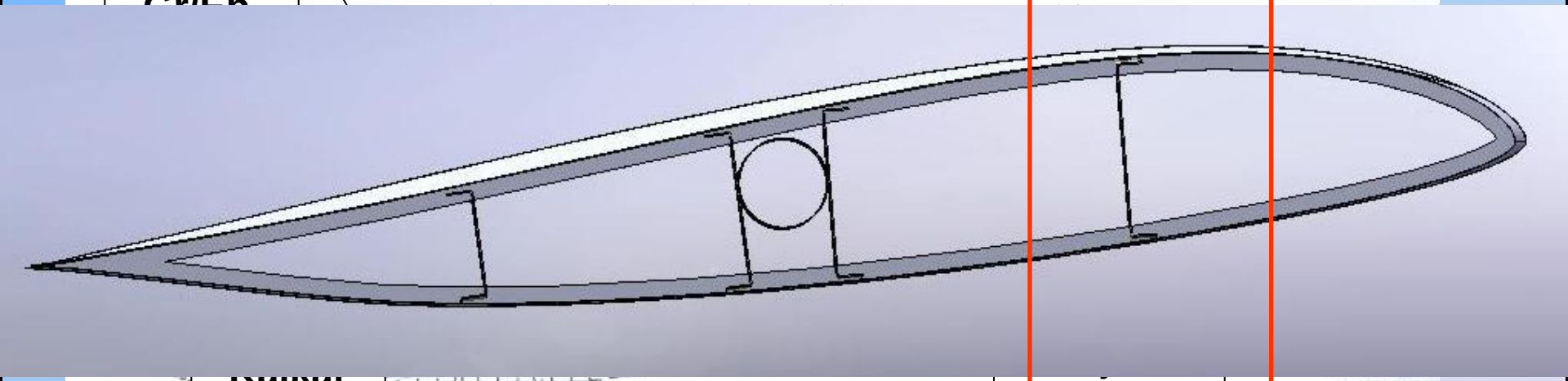

| | | | | option 4 | option 5 |
|---|---|---|---|---|---|
| 1.2mm Cr/Fp | | | | | |
| Kaikai | | | | nomex | ess |
| [Kg] | | | | | |
| Total per Wing | 2.16 | 1.8 | 1.95 | 1.44 | |

# UAV Recovery

## Parachute Size Estimation

| Parameter | Value | Units |
|---|---|---|
| Mass of UAV | 25.00 | kg |
| Descent Velocity | 5.00 | m/s |
| Drag Coefficient | 0.70 | |
| Parachute Filling Parameter | 8.00 | |
| Surface Area Required | 22.88 | m^2 |
| Nominal Parachute Diameter =Do | 5.40 | m |
| Infalted Diameter=Dp=0.66Do | 3.56 | m |

The fabric chosen is 498E-Type-G. The total canopy weight : **750grams.**
Adding strings and a case brings the total weight to : **1kg**.

Assuming a packing density of $570\frac{kg}{m^3}$, the total volume required:

**1.4 litres**

# UAV Recovery

## Parachute Canopy Shape Selection

| | Hemispherical | Cross |
|---|---|---|
| $C_{D_0}$ |  | 0.6→0.78  |
| **Oscillations ( avg )** | | |
| $S_{Parachute}$ | | |
| **Opening Force Factor** | | 1.2g |

The **Cross** shaped canopy minimizes the oscillations , and reduces the impact from the inflation of the canopy on the airframe.

# UAV Recovery

## Parachute Doors

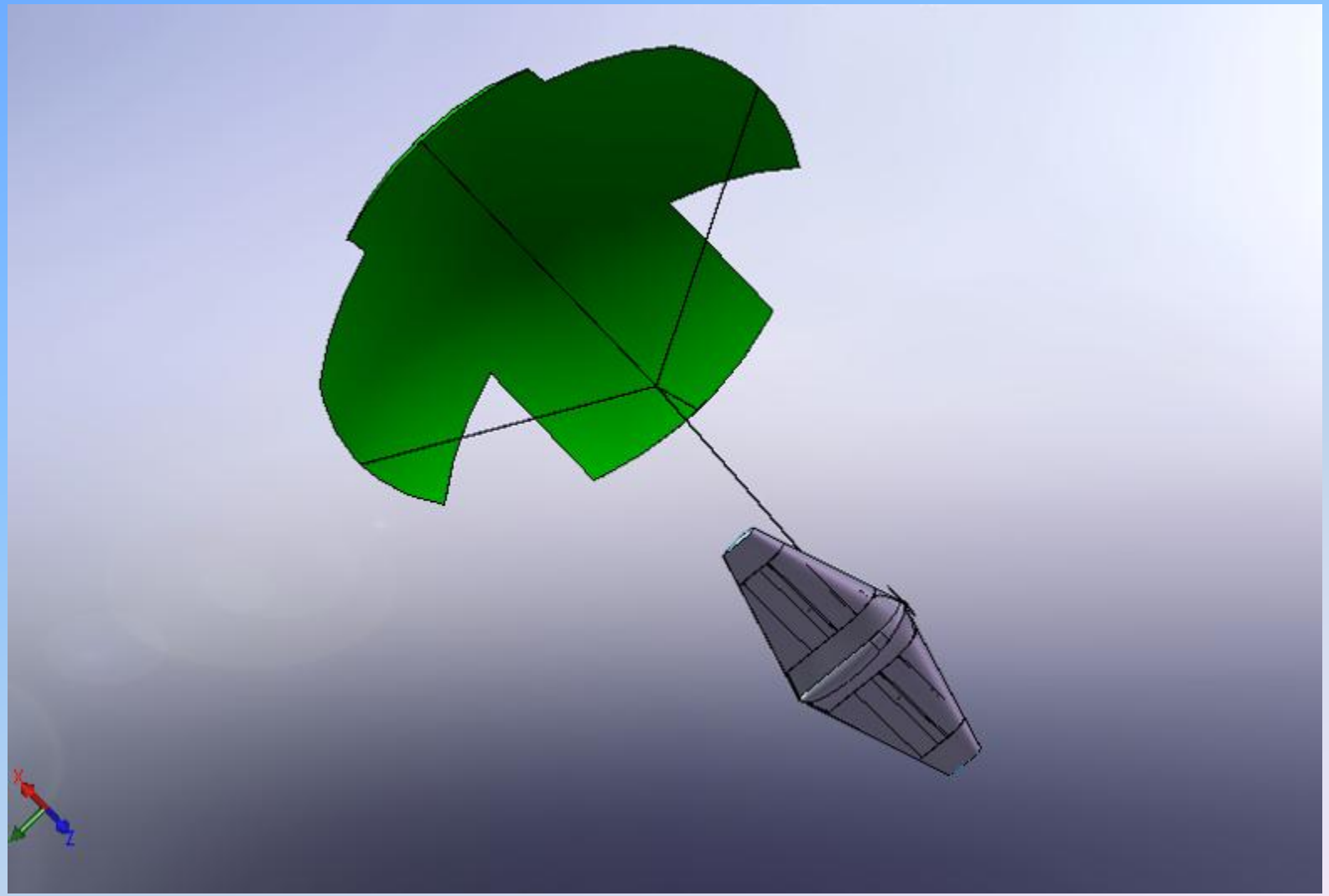

# UAV Recovery

## Air Bag System

The Air-Bag was estimated based on the SkyLite-B airbag :

| | SkyLite B | ILAS |
|---|---|---|
| Weight [Kg] | 8 | 25 |
| Inflated Volume [litres] | 9 | 30 |
| Airbag Weight [ grams] | 60 | 200 |
| Pack volume [litres] | 0.47 | 1.5 |

Air Bag Door

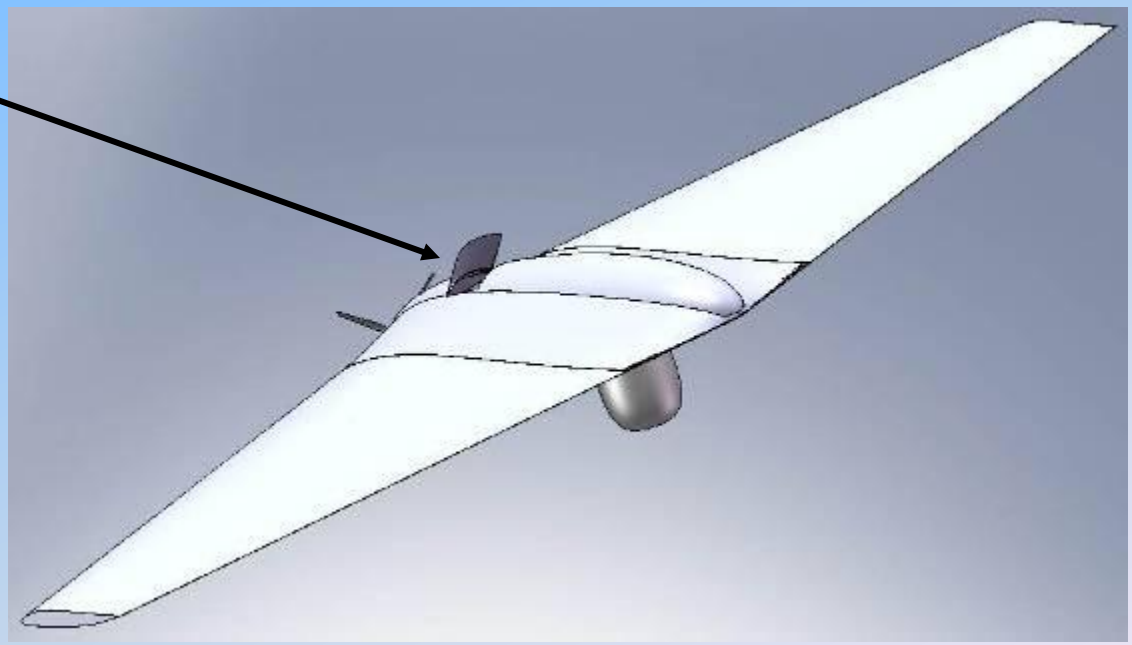

# UAV Recovery

- **The EO sensor remains out of the fuselage for the entire flight.**

- **Therefore, before landing, ILAS will roll over, and then initiate the landing process.**

- **The Cross-Canopied Parachute will eject , and at the same time the Airbag will inflate.**

# Layout of UAV Systems

## Assembly Process

2. Inserting the Batteries
3. Assembling the wings to the fuselage:

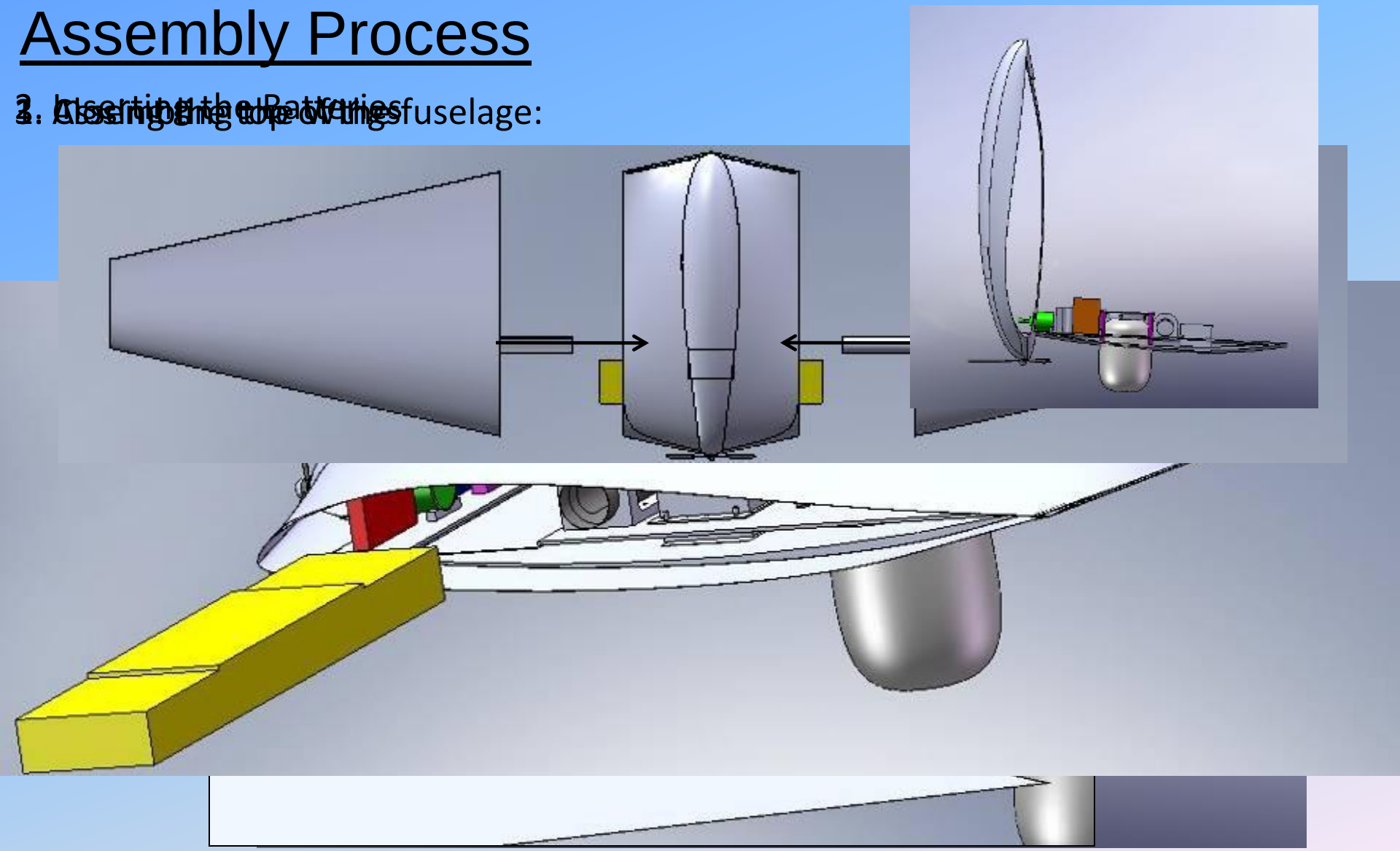

# Layout of UAV Systems

## Layout Top View

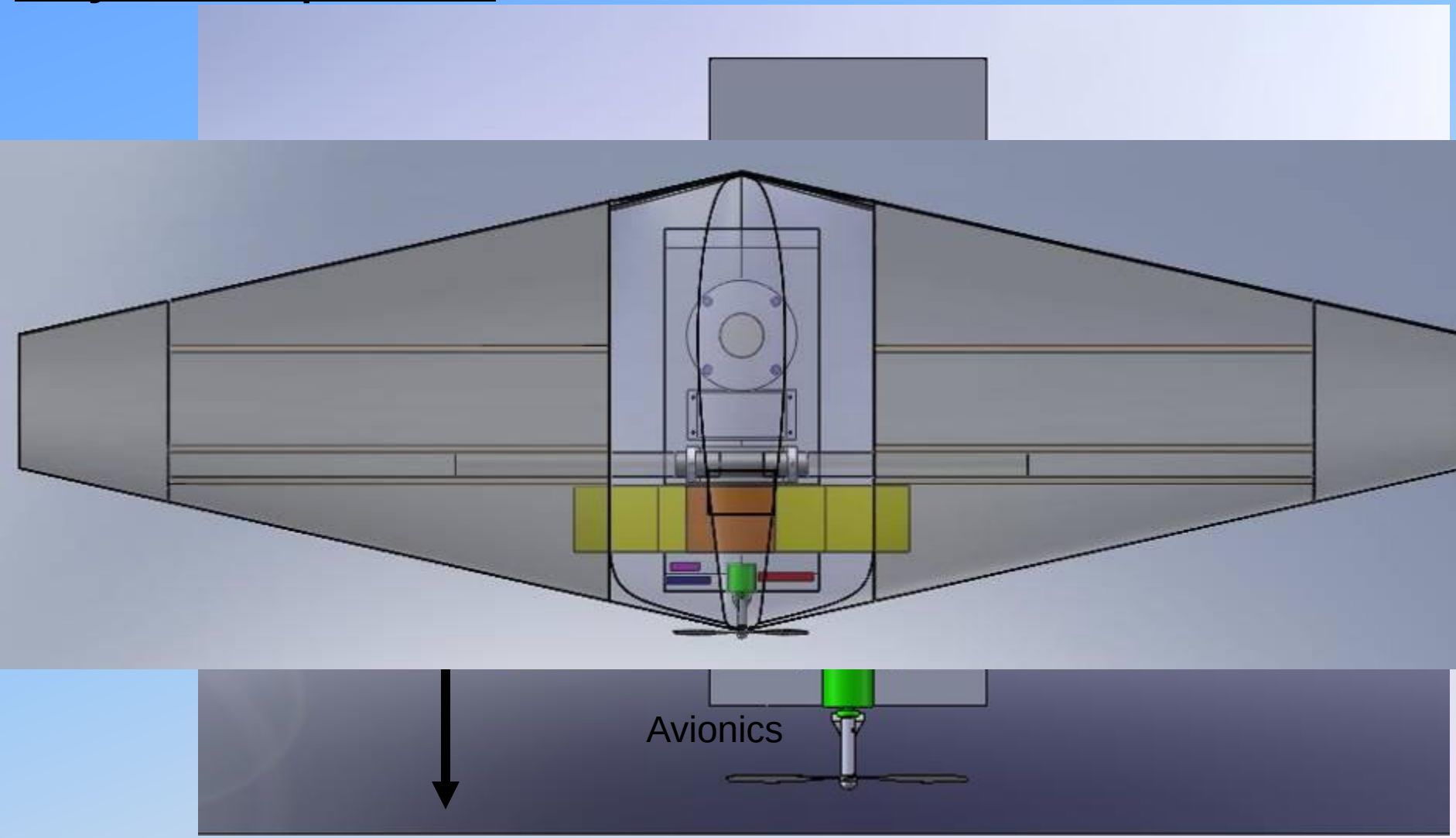

# Layout of UAV Systems

## Motor Cooling Scoop (NACA Scoop)

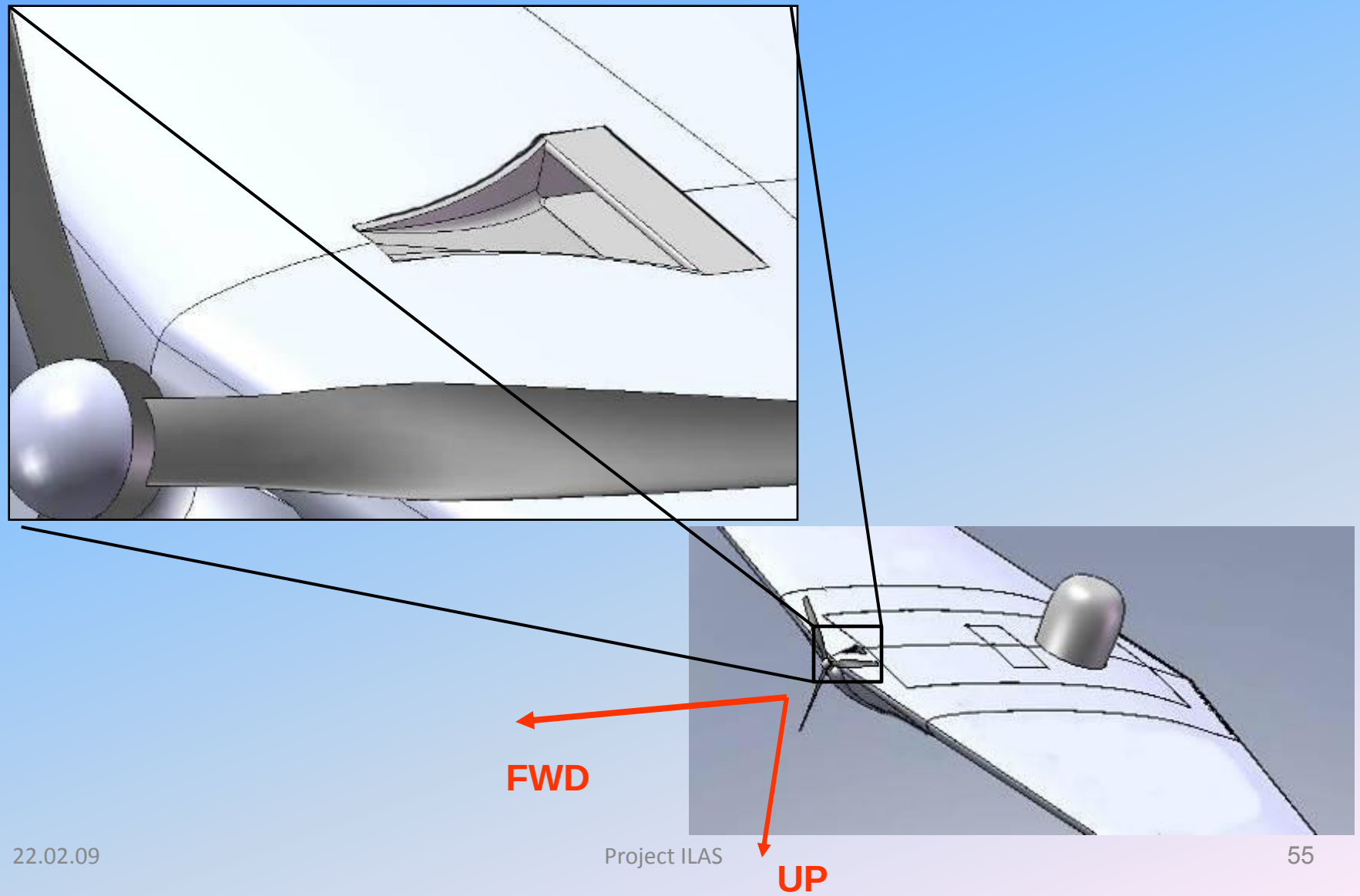

# Layout of UAV Systems

## Layout Side View

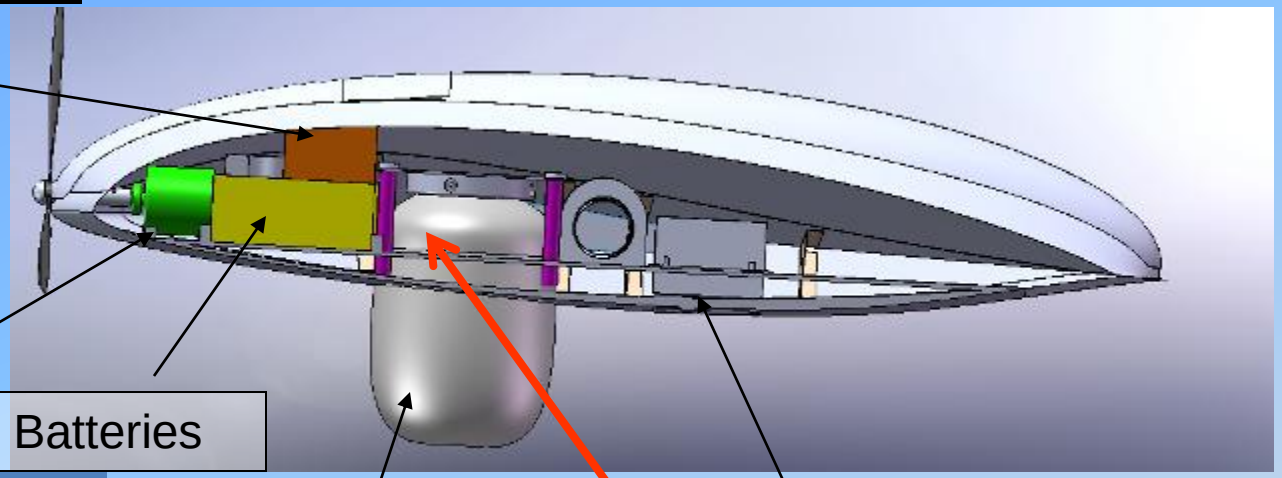


| | X ( m ) | Mass (Kg ) | X*Mass |
|---|---|---|---|
| Engine | 0.100 | 0.652 | 0.065 |
| Avionics | 0.144 | 0.4 | 0.058 |
| Air Bag | 0.251 | 0.45 | 0.113 |
| Batteries | 0.251 | 9.8 | 2.460 |
| Beam | 0.370 | 0.242 | 0.090 |
| Payload | 0.350 | 3 | 1.989 |
| Parachute | 0.6 | 1 | 0.483 |
| Wings | 0.278 | 2.5 | 0.694 |
| Fuselage | 0.455 | 4 | 1.82 |
| Contingency | 0.407 | 1 | 0.407 |
| | | CG | 335 |
| Total | Mass | 23.044 | |

**C.G Location : 335 [mm] from the nose**

# Wind Tunnel Model and Tests

## Model Production – Rapid Prototyping

Rapid prototyping takes virtual designs from CAD files, transforms them into thin, virtual, horizontal cross-sections and then creates each cross-section in physical space, one after the next until the model is finished.

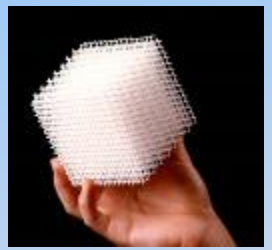

The techniques use two materials in the course of constructing parts. The first material is the part material and the second is the support material (to support overhanging features during construction). The support material is later removed by heat or dissolved away with a solvent or water.

# Wind Tunnel Model and Tests

## Model Creation – Rapid Prototyping

**A Rapid Prototyping model can be directly created by a simple STL CAD file, requiring no drawings or other views.**

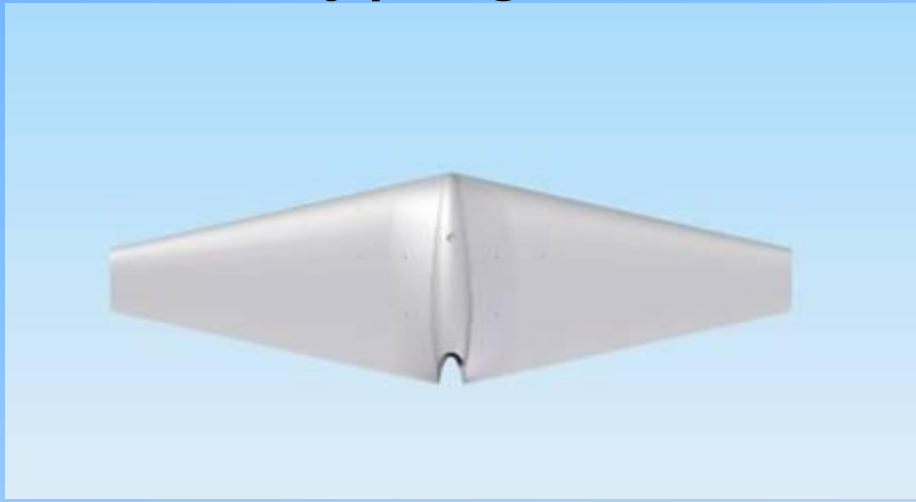

**<u>Note</u>: the connector rods were manufactured from Aluminum using a CNC machine.**

# Wind Tunnel Model and Tests

## Model Creation – Rapid Prototyping

**Rapid prototyping part**

**Solidworks part**

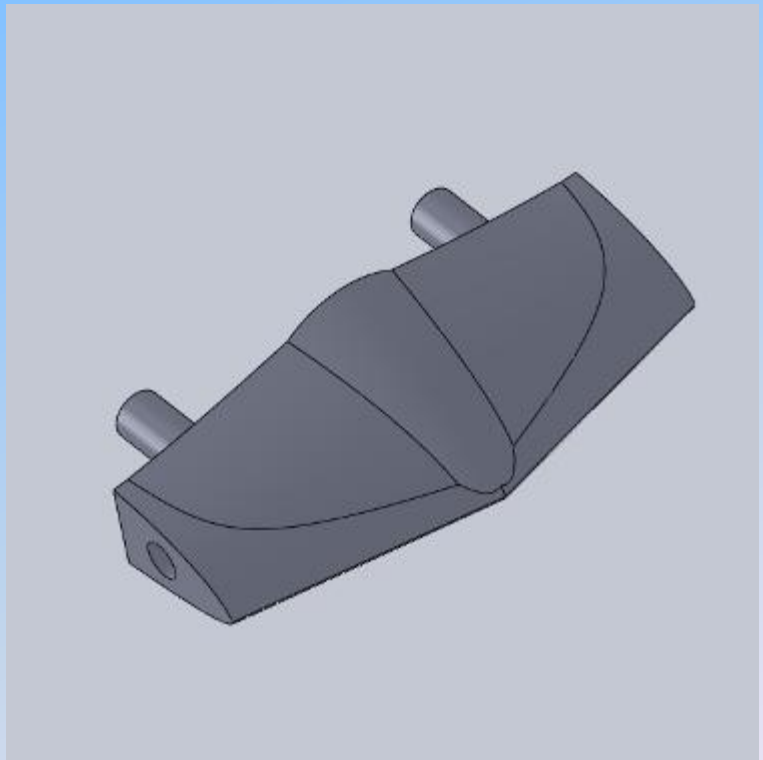

# Wind Tunnel Model and Tests

## Wind Tunnel Model

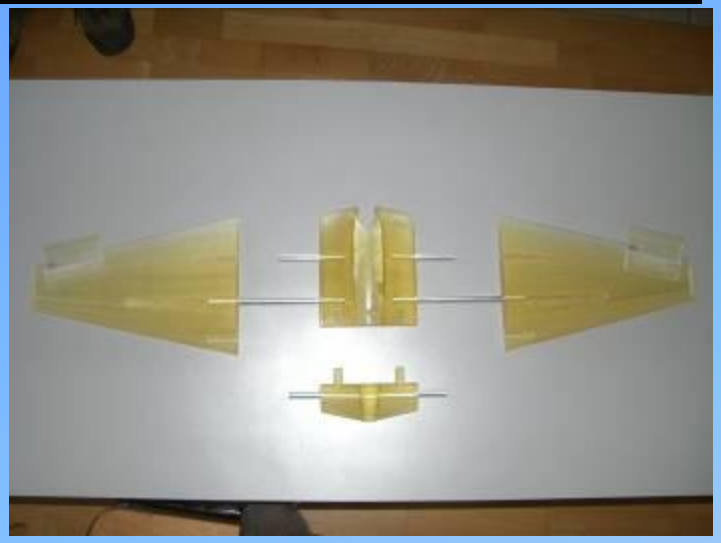

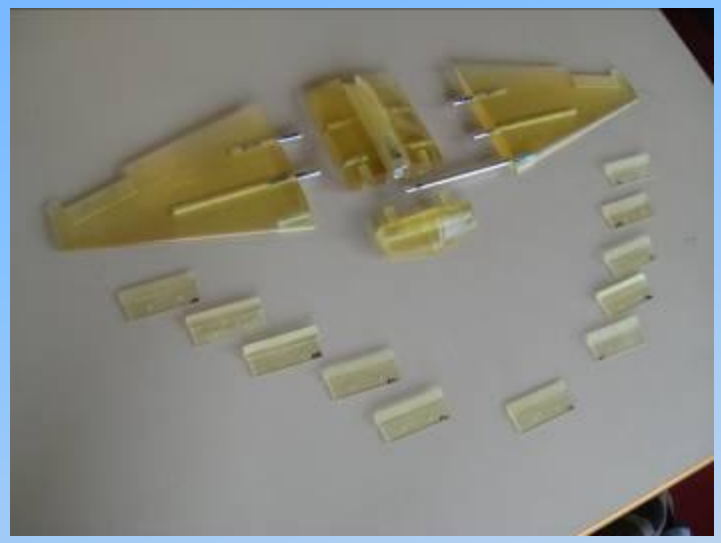

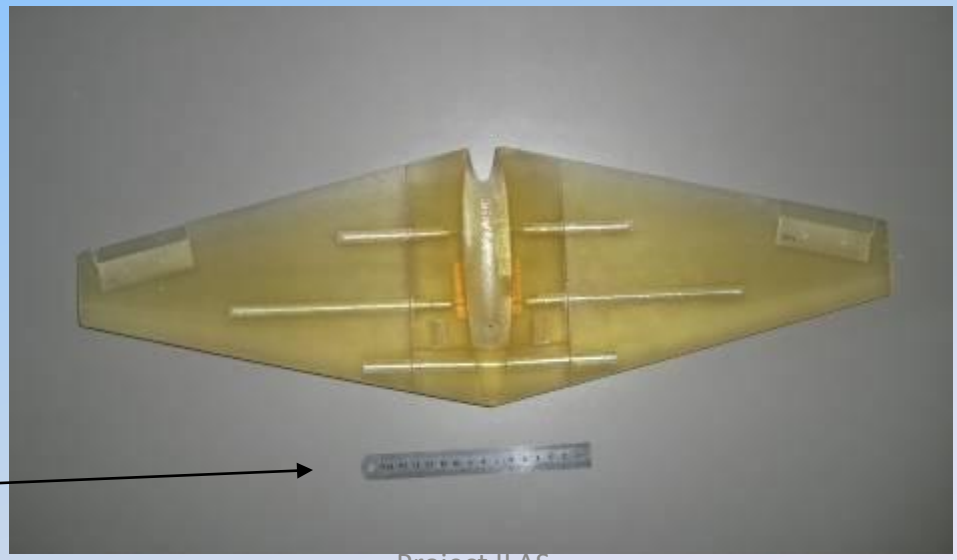

# Wind Tunnel Model and Tests

## Rapid Prototyping – Pro's and Con's

**Pro's:**

1. Easy and fast Manufacturing.
2. Low cost (about 1/3 cost of an Aluminum model).
3. Good for low-speed Wind tunnel testing

**Con's**

1. Made from weaker material than the Aluminum models.
2. There is a possibility of model creeping after a while, causing structural deformations.

# Wind Tunnel Model and Tests

## Wind Tunnel Test Plan

**Longitudinal :**

**1**.Angle of attack scanning at (-4)-:-(13) degrees.
- **1a**.Producing a Lift coefficient VS AOA Graph.
- **1b**.Producing a Pitch Moment VS AOA Graph.

**2**. Finding the longitudinal Neutral Point.

**Lateral :**

**3**. Sideslip Angle Scan at 0-11 degrees.
- **3a**. Elevons at 20 degrees opening.
- **3b**. Elevons at 15 degrees opening.
- **3c**. Elevons at 10 degrees opening.
- **3d**. Splitters (Left Elevon – 15 degrees).
  - **3d1**. Splitters at 15 degrees.
  - **3d2**. Splitters at 20 degrees.
  - **3d3**. Splitters at 25 degrees.

# Wind Tunnel - Results and Analysis

## Wind Tunnel Test Photos

# Wind Tunnel - Results and Analysis

## Balance Error or How the Nobel Slipped away…

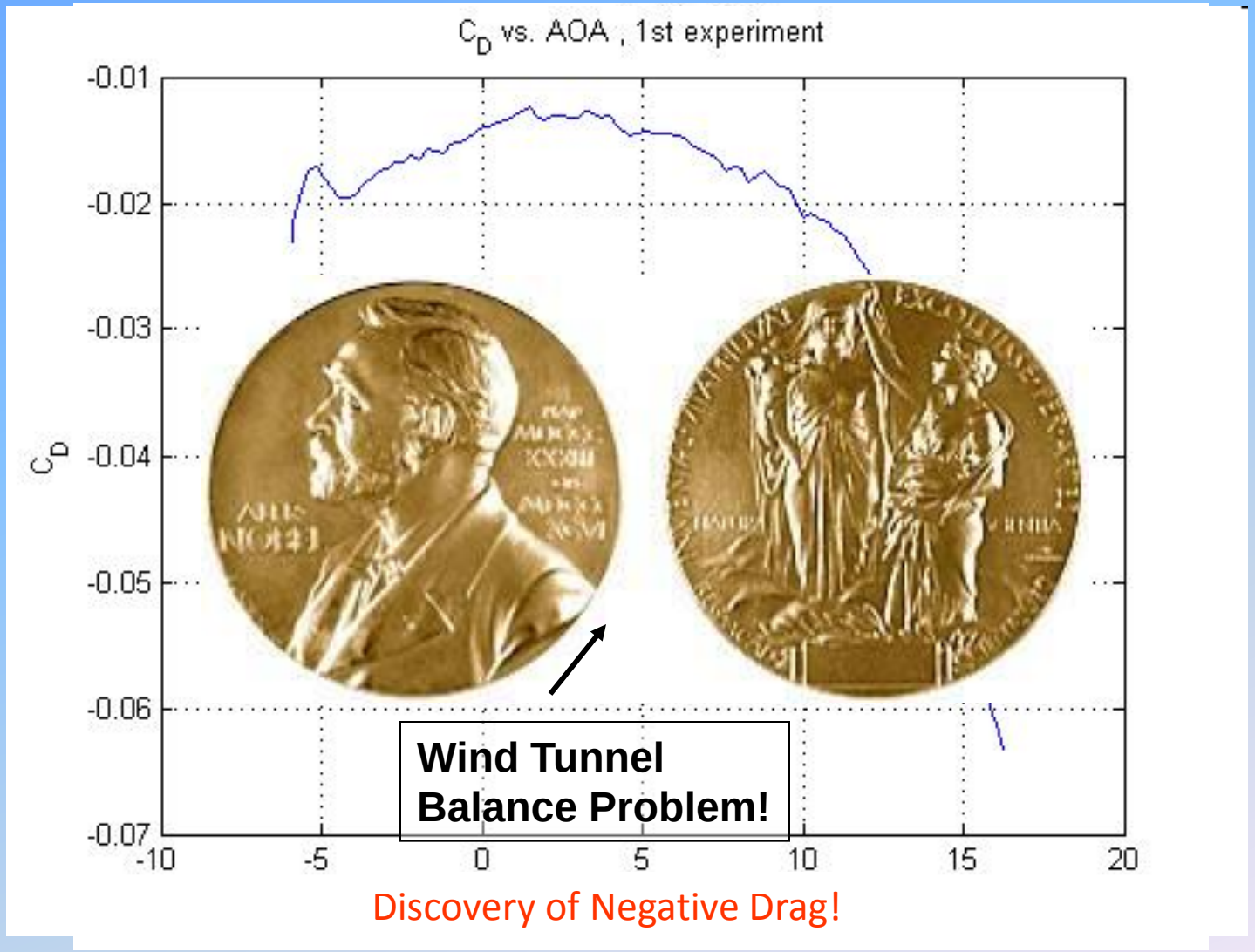


Discovery of Negative Drag!

# Wind Tunnel - Results and Analysis

**Lift coefficient Vs AOA :**

Experimental value vs. theoretical :

Theoretical graph : $C_{L\alpha} = 4.8$

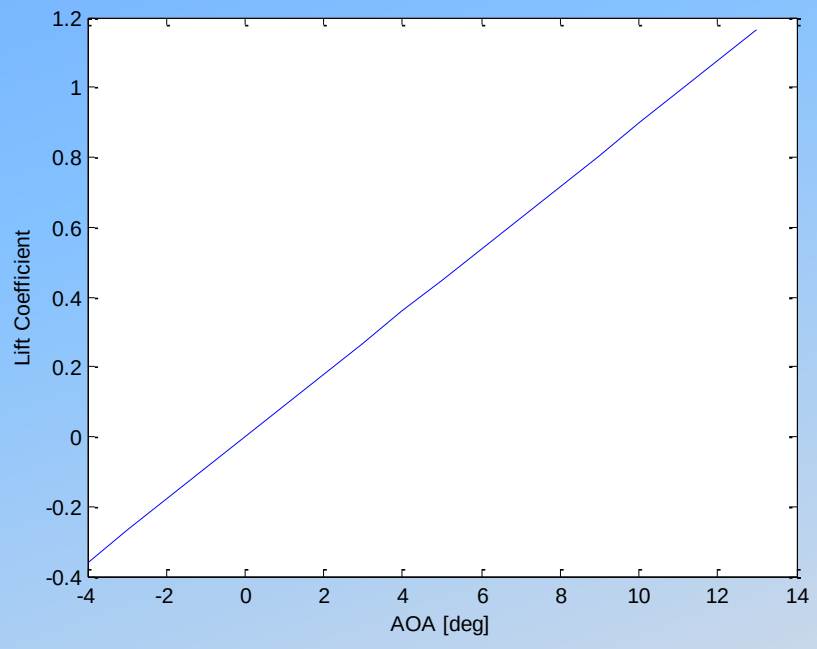


Experiment : $C_{L\alpha} = 3.6$

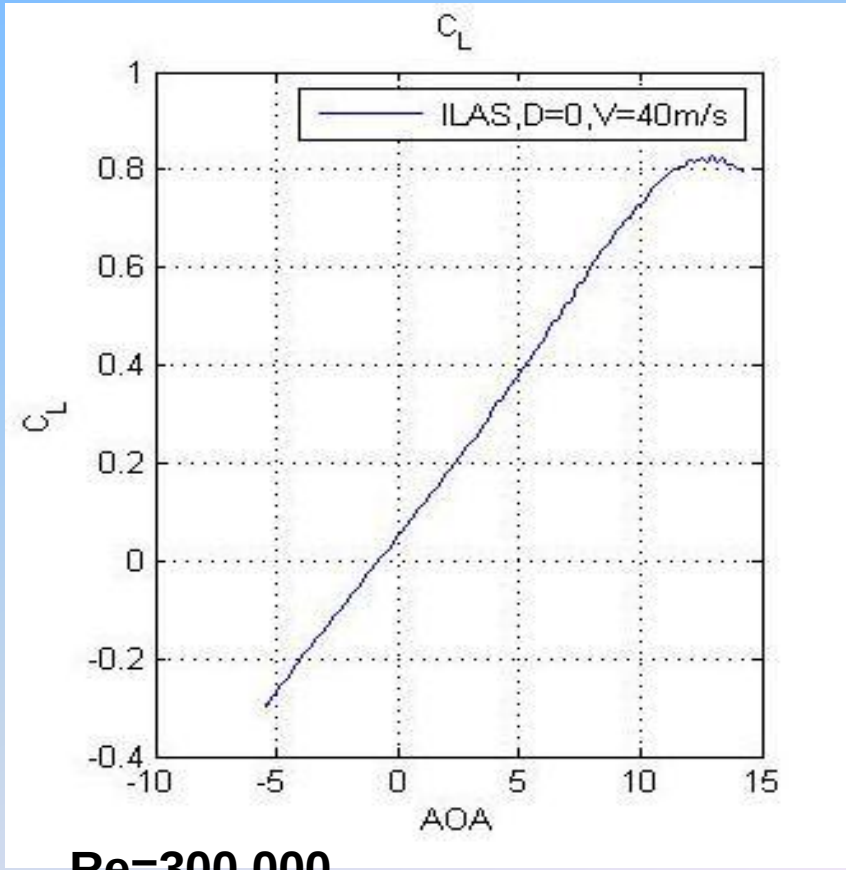


**Re=300,000**

# Wind Tunnel - Results and Analysis

**Lift Coefficient For cruise :**

**Theory** : Assuming a cruise velocity of $22_{m/s}$, $C_L$ required is **0.447**, which will be achieved at An AOA of $6^O$ .

**Experiment** : The desired coefficient is achieved at an AOA of $5.89^O$

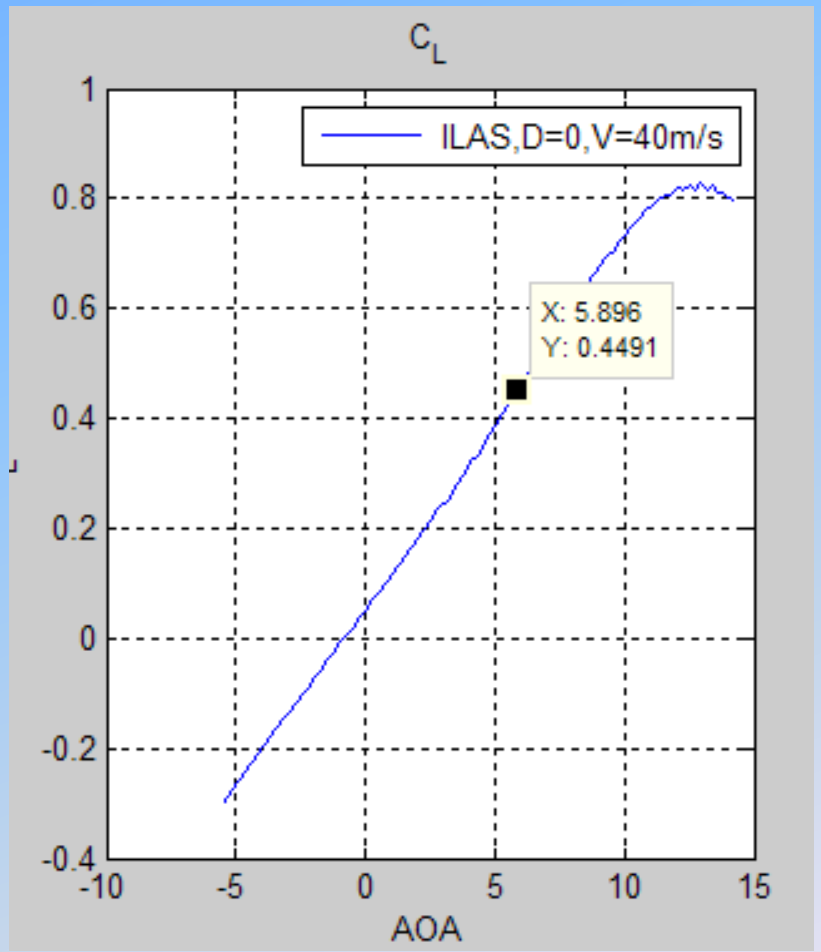

# Wind Tunnel - Results and Analysis

**Stall Angle of Attack**

- **Theory:** The analysis indicated a stall AOA of 13 degrees

# Wind Tunnel - Results and Analysis

**L/D Ratio:**

**Theory**: Analysis indicated that the maximal L/D will be 20 .

**Experiment**: The maximal L/D is 18.87 , at an AOA of $6.64^{O}$

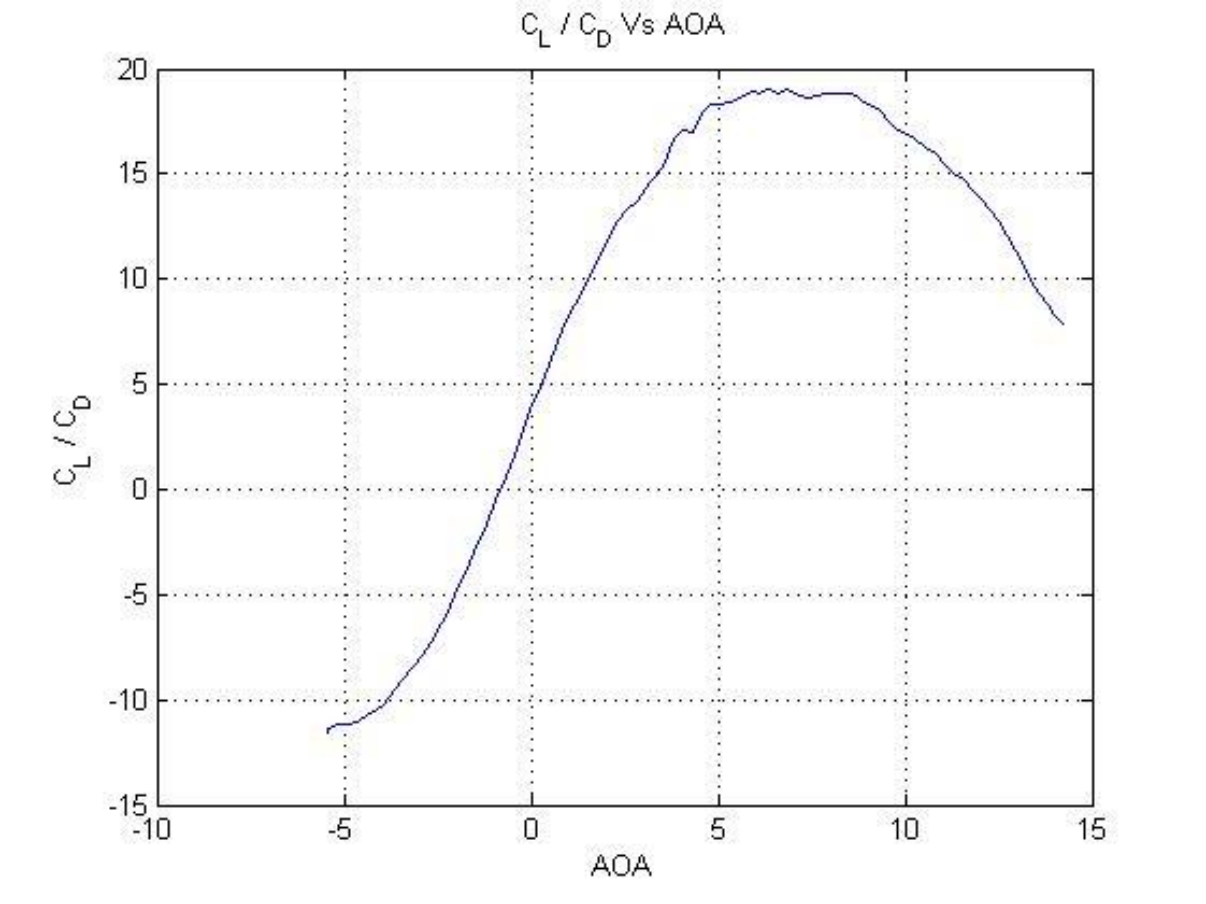

# Wind Tunnel - Results and Analysis

# Wind Tunnel - Results and Analysis

**Pitch Moment Vs CL :**

Graph of $C_M(C_L)$ Contrary to the reflex theory , the graph is linear , thus the neutral
Point Is constant !

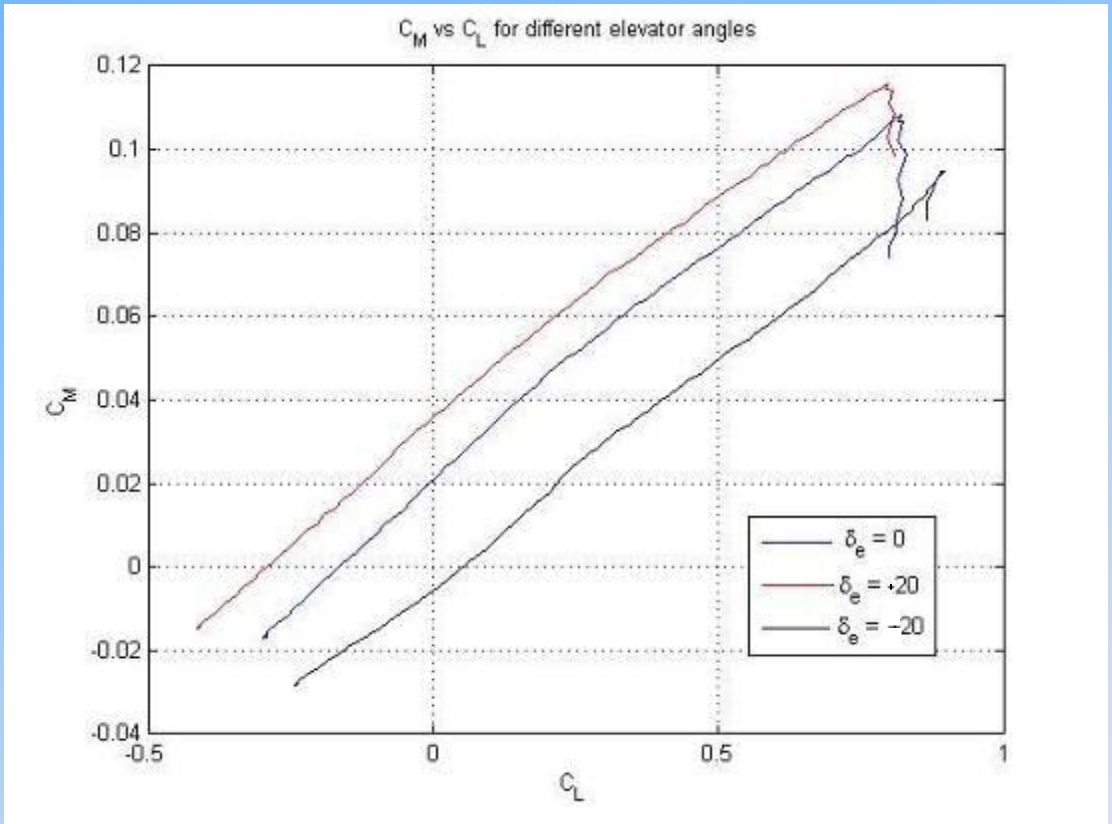


The neutral point $X_N$ is constant , and located $35.5_{cm}$ from the nose. It doesn't move when The elevators are engaged – the lines are parallel : $\frac{\partial C_M}{\partial C_L} = Cons\tan t$ , thus **the Neutral Point is Fixed.**

# Wind Tunnel - Results and Analysis

**Ailerons :**

When activated differentially , the control surfaces act as ailerons.
The following graphs show the effect of different ailerons angles on the Roll Moment.
The results show that the Roll Moment is symmetric when the surfaces are neutral , which Indicates a symmetric plane , and that the trend is positive -> as predicted. A positive aileron Tilt causes a positive ( CW ) Roll Moment.

$\delta_a = 0^O$

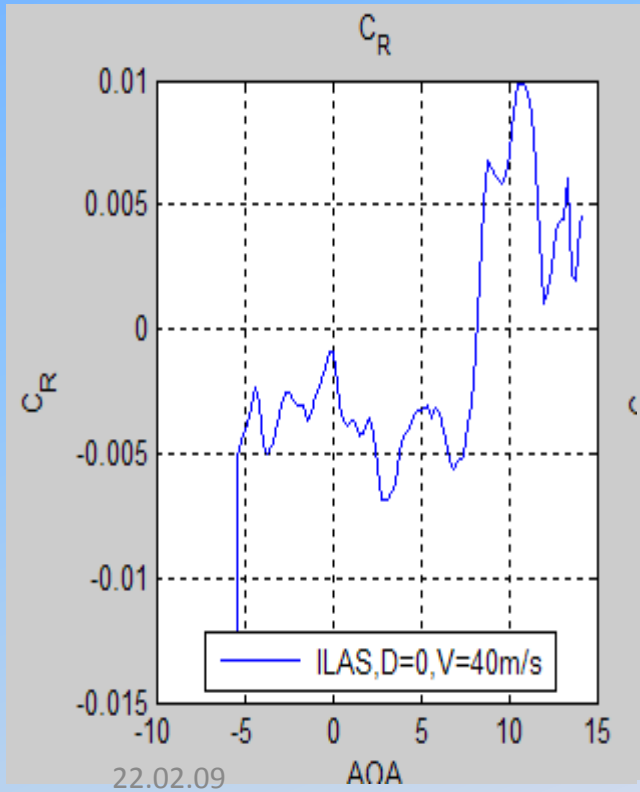


$\delta_a = 15^O$

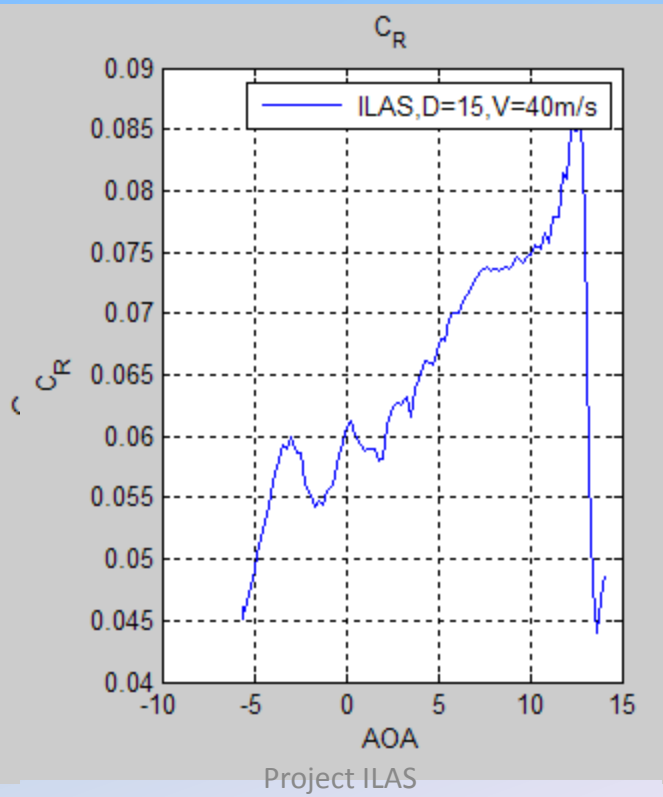


$\delta_a = 20^O$

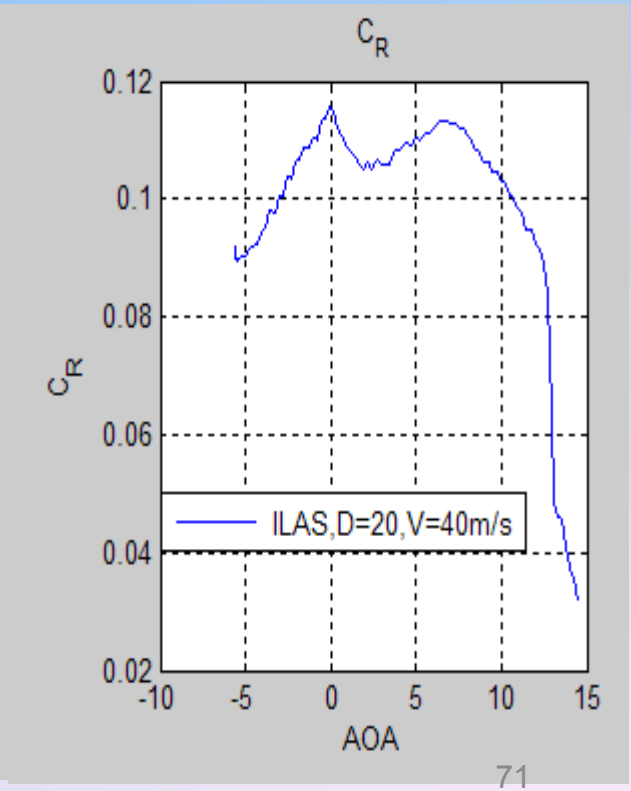

# Wind Tunnel - Results and Analysis

**Splitters:**

The Splitters can be activated individually, causing Yaw and Roll moments. During our Experiment , we tested 3 splitter angles : 0 , 15 , 20 , 25 degrees. The results show that opening the right splitter at 25 deg , Produces a yaw moment twice the size of the Y.M produced with Neutral control surfaces. However , the moment is negligible Compared to the Roll Moment produced by the splitter.

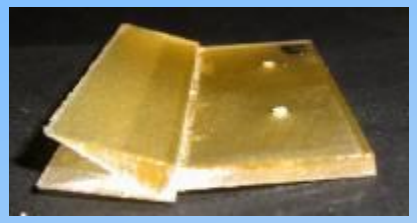

The Roll Moment increases with the splitter angle. Opening a splitter on the right wing Produces a positive ( CW ) Roll Moment.

$\delta_S = 0^O$

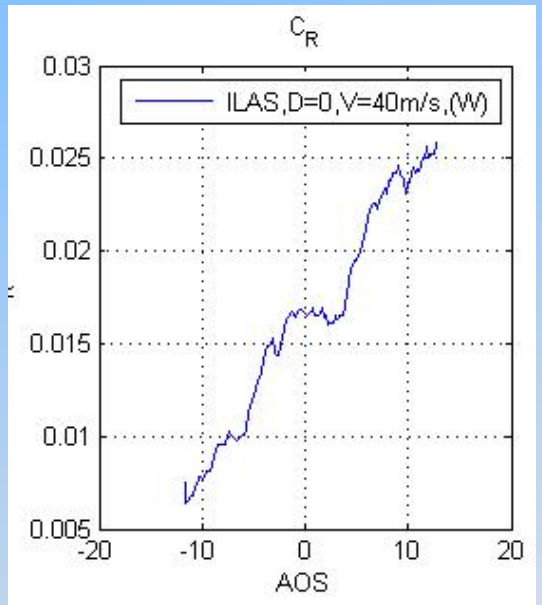


$\delta_S = 25^O$

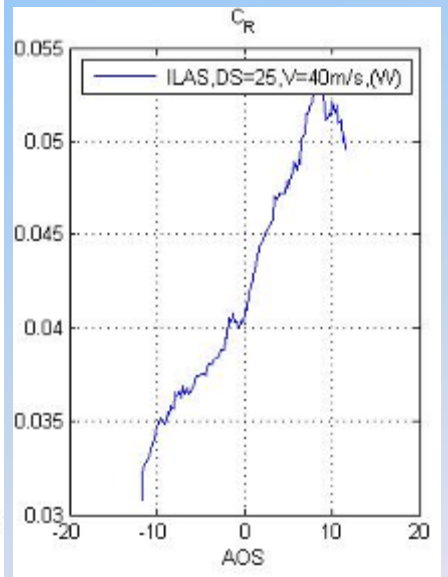


$\delta_S = 0^O$

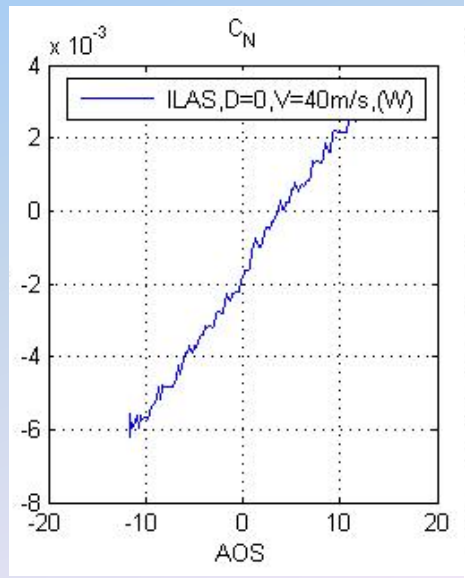


$\delta_S = 25^O$

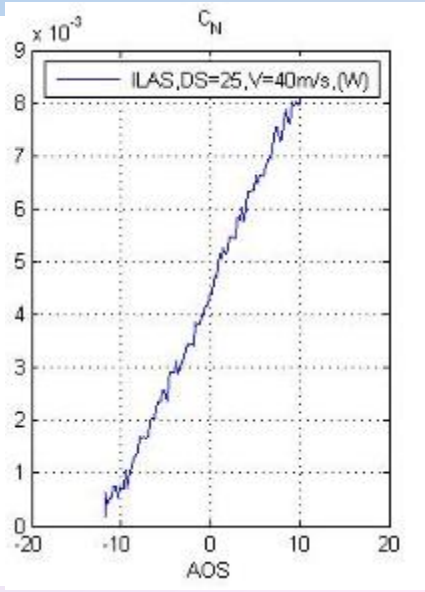

# Project Summary and Conclusions

## Requirements VS Achievements

1. **Low Acoustic Signature** – This requirement was achieved via using an electric engine, a 3-bladed propeller and a low interference design.
2. **Easy Launch and Recovery –** The UAV is launched with a bungee catapult and recovered via parachute, obsolescing the need for a runway , sophisticated machinery or a large crew.
3. **Endurance of 5 Hours –** This objective was not met, as the design only allowed 3 hours of endurance due to weight and space restrictions.
4. **EO Sensor of 2.5 kg -** The T-stamp EO sensor fulfills the requirement.

5. **Low RCS Configuration** – the flying wing configuration has a low RCS .

# Project Summary and Conclusions

**We would like to thank the following people:**

Professor Gil Iosilevskii

Professor  Rimon Arieli

Professor Arthur Grunwald

Dr. Ehud Kroll

Mr. Moti Ringel

Mr. Marcel Leventer.

Mr. Prosper Shushan.

Mrs. Henia Flor.

# Project Summary and Conclusions

**Questions?**